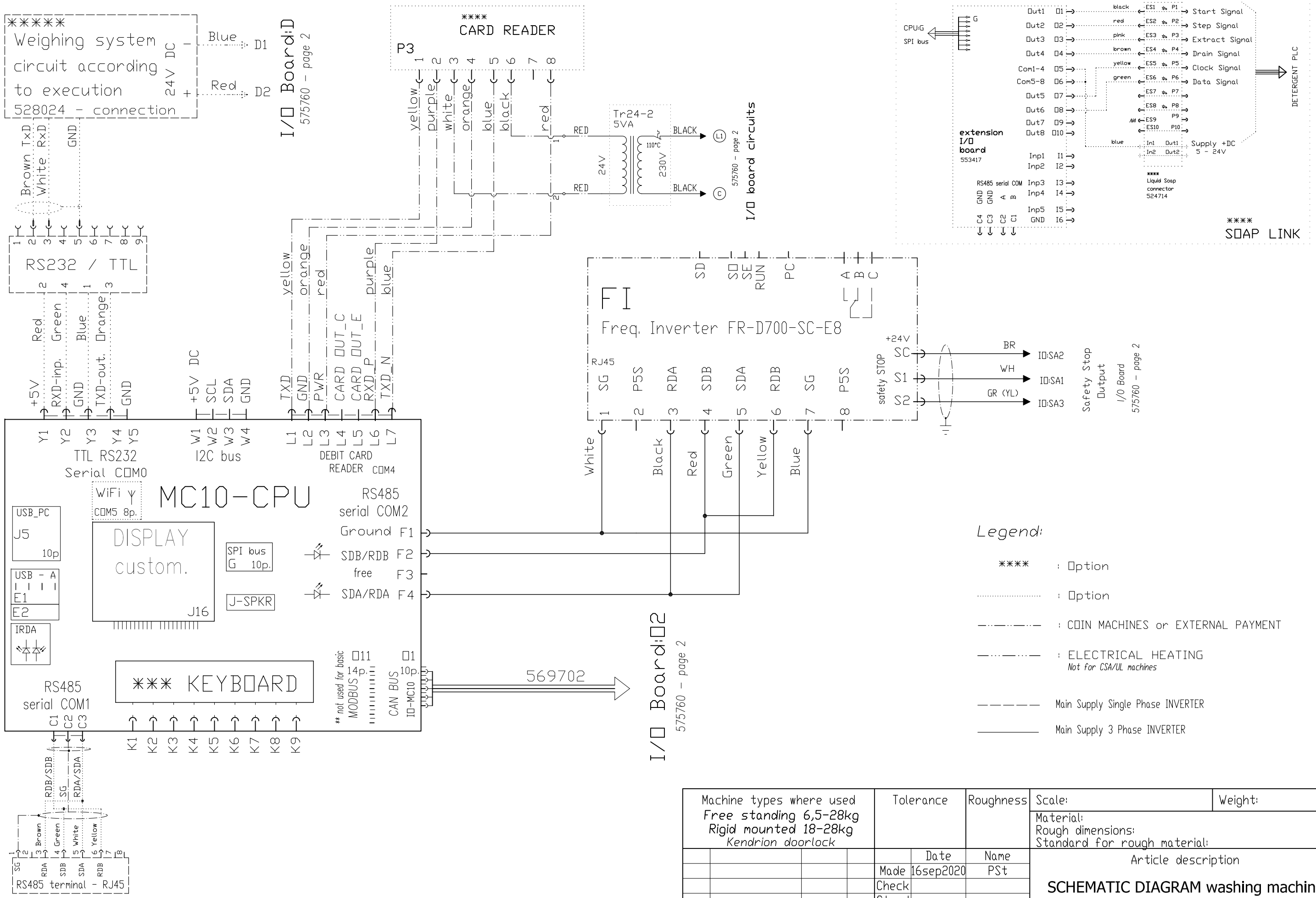

Legend:

**** : Option

..... : Option

—··—··— : COIN MACHINES or EXTERNAL PAYMENT

—···—···— : ELECTRICAL HEATING
Not for CSA/UL machines

— — — — — Main Supply Single Phase INVERTER

———— Main Supply 3 Phase INVERTER

Machine types where used	Tolerance	Roughness	Scale:	Weight:
Free standing 6,5-28kg *Rigid mounted 18-28kg* *Kendrion doorlock*			Material: Rough dimensions: Standard for rough material:	

	Date	Name
Made	16sep2020	PSt
Check		
Stand		

Article description

SCHEMATIC DIAGRAM washing machine - MC10 controller

Main group	Article number	Page: 1
960	575 760	Pages:3

Stat	Modification	Date	Name
B	Basic ex. add	3.3.2021	PSt
A	Heat 6kW 1AC	4.10.2020	PSt

Replaces: | Replaced by:

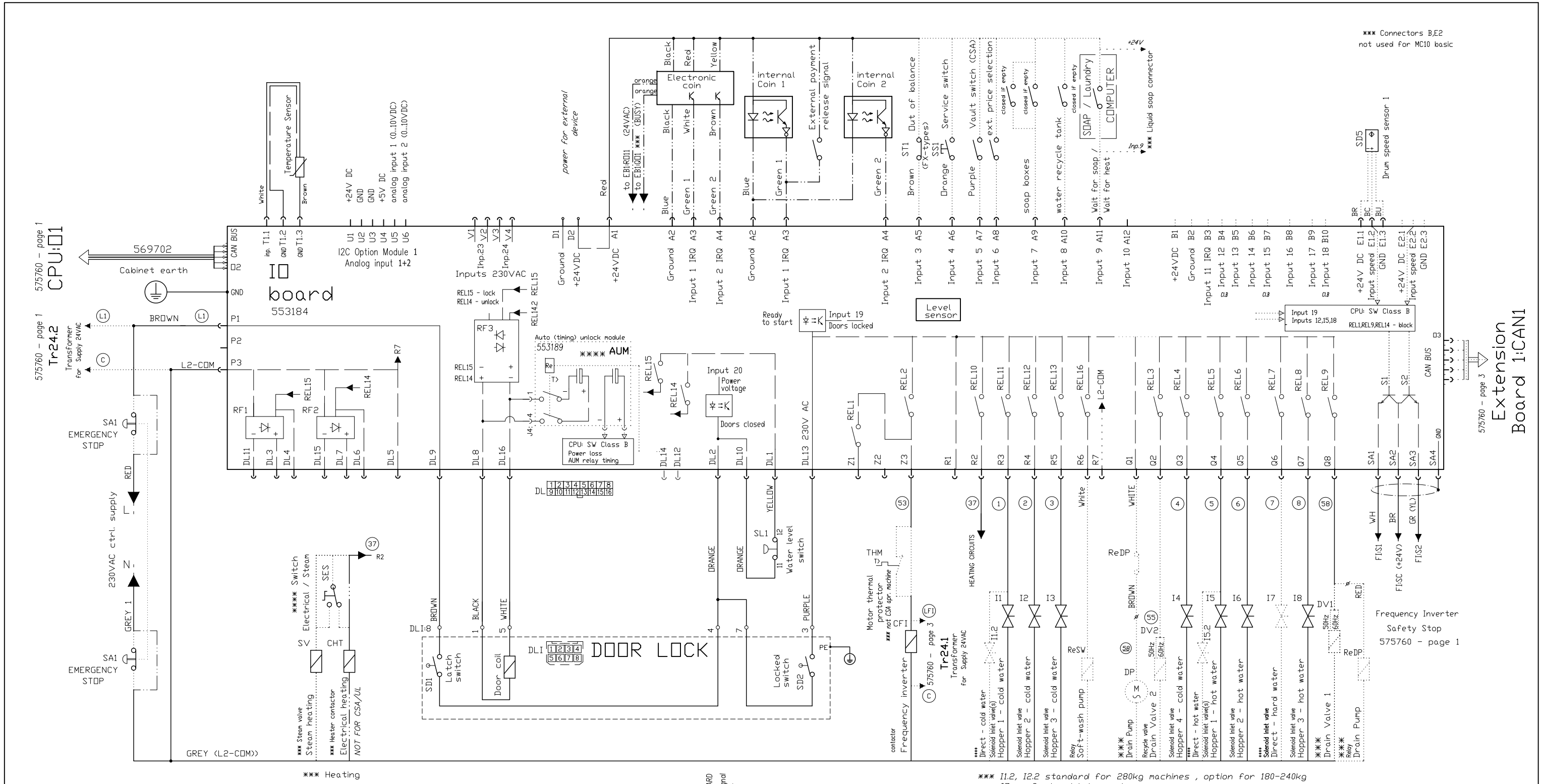

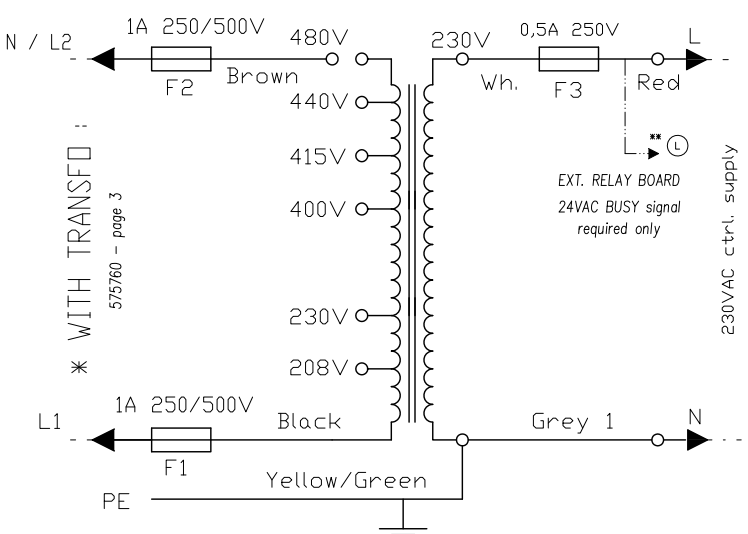

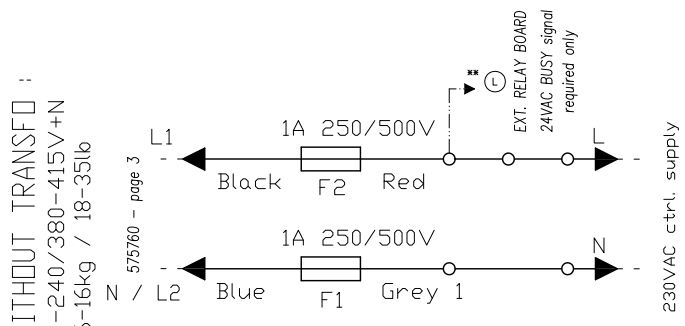

Legend:

**** : Option

..... : Option

—·—·— : COIN MACHINES or EXTERNAL PAYMENT

—··— : ELECTRICAL HEATING
Not for CSA/UL machines

Machine types where used	Tolerance	Roughness	Scale:	Weight:
Free standing 6,5-28kg *Rigid mounted 18-28kg* *Kendrion doorlock*			Material: Rough dimensions: Standard for rough material:	

	Date	Name
Made	16sep2020	PSt
Check		
Stand		

Stat	Modification	Date	Name
B	Basic ex. add	3.3.2021	PSt
A	Heat 6kW 1AC	4.10.2020	PSt

Article description

SCHEMATIC DIAGRAM washing machine - MC10 controller

Main group	Article number	Page: 2
960	575 760	Pages:3

Replaces: | Replaced by:

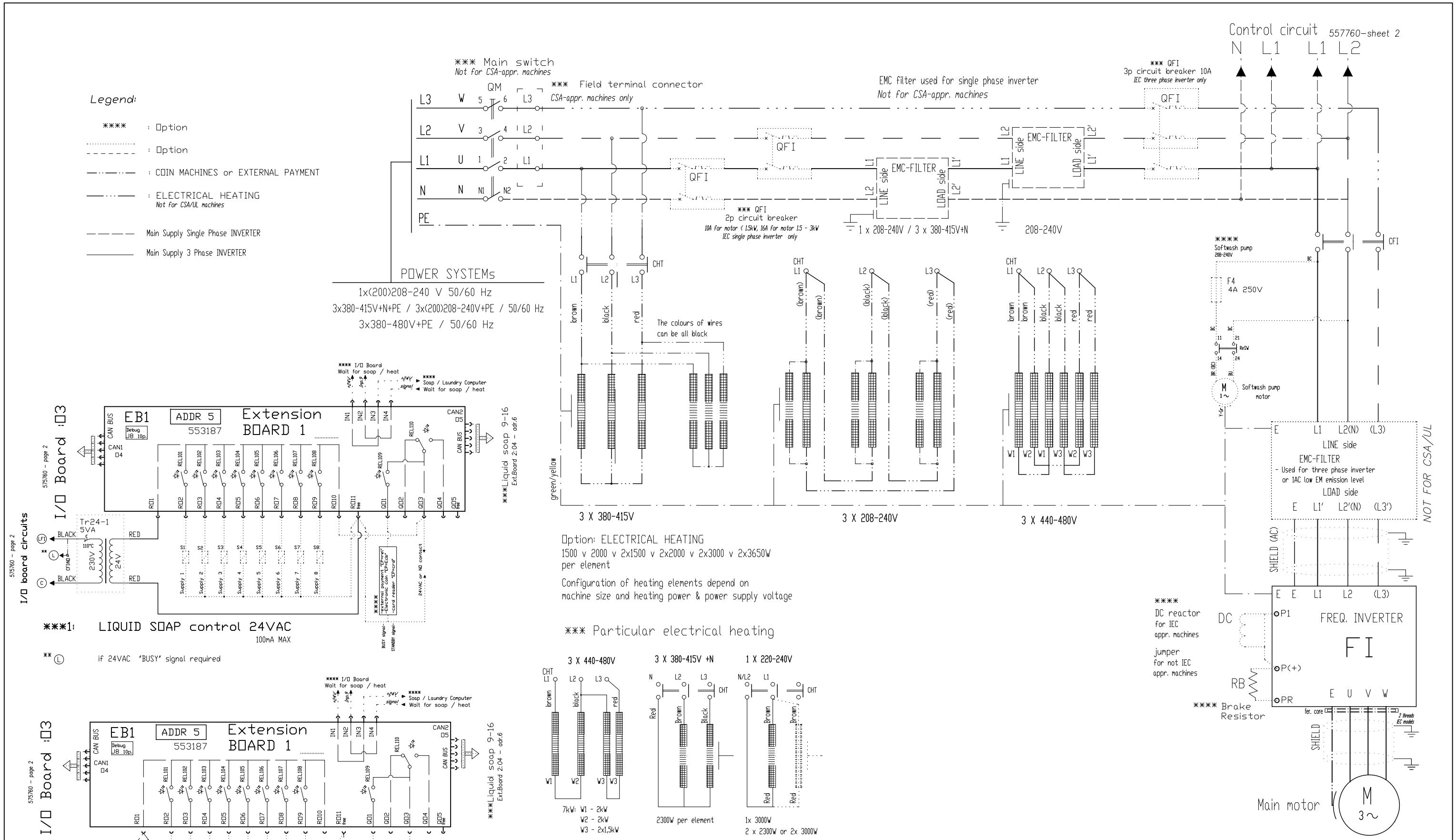

Option: ELECTRICAL HEATING
1500 v 2000 v 2x1500 v 2x2000 v 2x3000 v 2x3650W per element

Configuration of heating elements depend on machine size and heating power & power supply voltage

Machine types where used	Tolerance	Roughness	Scale:	Weight:
Free standing 6,5-28kg Rigid mounted 18-28kg Kendrion doorlock			Material: Rough dimensions: Standard for rough material:	

	Date	Name
Made	16sep2020	PSt
Check		
Stand		

Stat	Modification	Date	Name
B	Basic ex. add	3.3.2021	PSt
A	Heat 6kW 1AC	4.10.2020	PSt

Article description

SCHEMATIC DIAGRAM washing machine - MC10 controller

Main group	Article number	Page: 3
960	575 760	Pages:3

Replaces: | Replaced by:

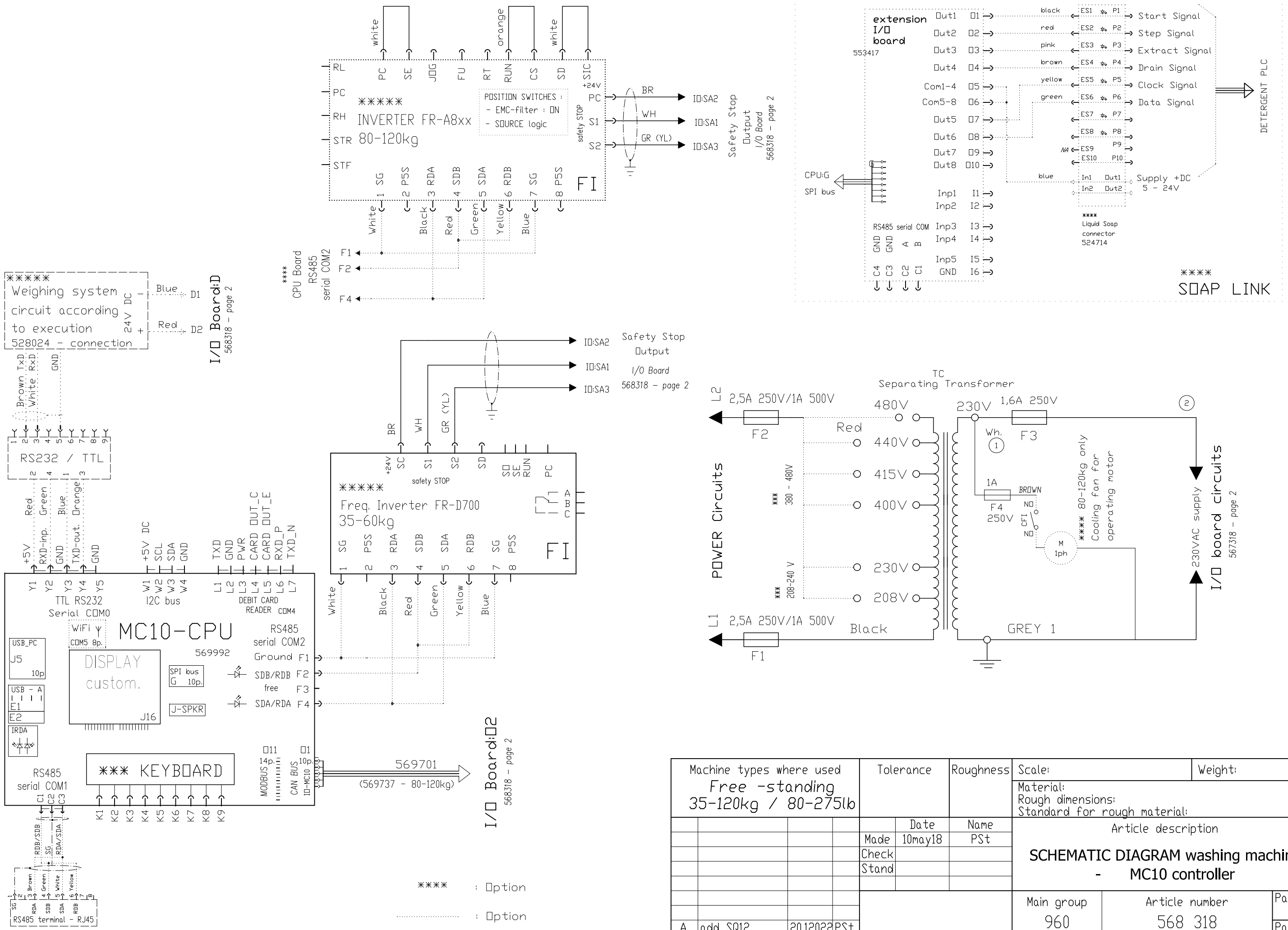

Machine types where used	Tolerance	Roughness	Scale:	Weight:
Free -standing 35-120kg / 80-275lb			Material: Rough dimensions: Standard for rough material:	

	Date	Name
Made	10may18	PSt
Check		
Stand		

Article description

SCHEMATIC DIAGRAM washing machine - MC10 controller

Main group	Article number	Page: 1
960	568 318	Pages:3

Stat	Modification	Date	Name
A	add SQ12	20.12022	PSt

Replaces: Replaced by:

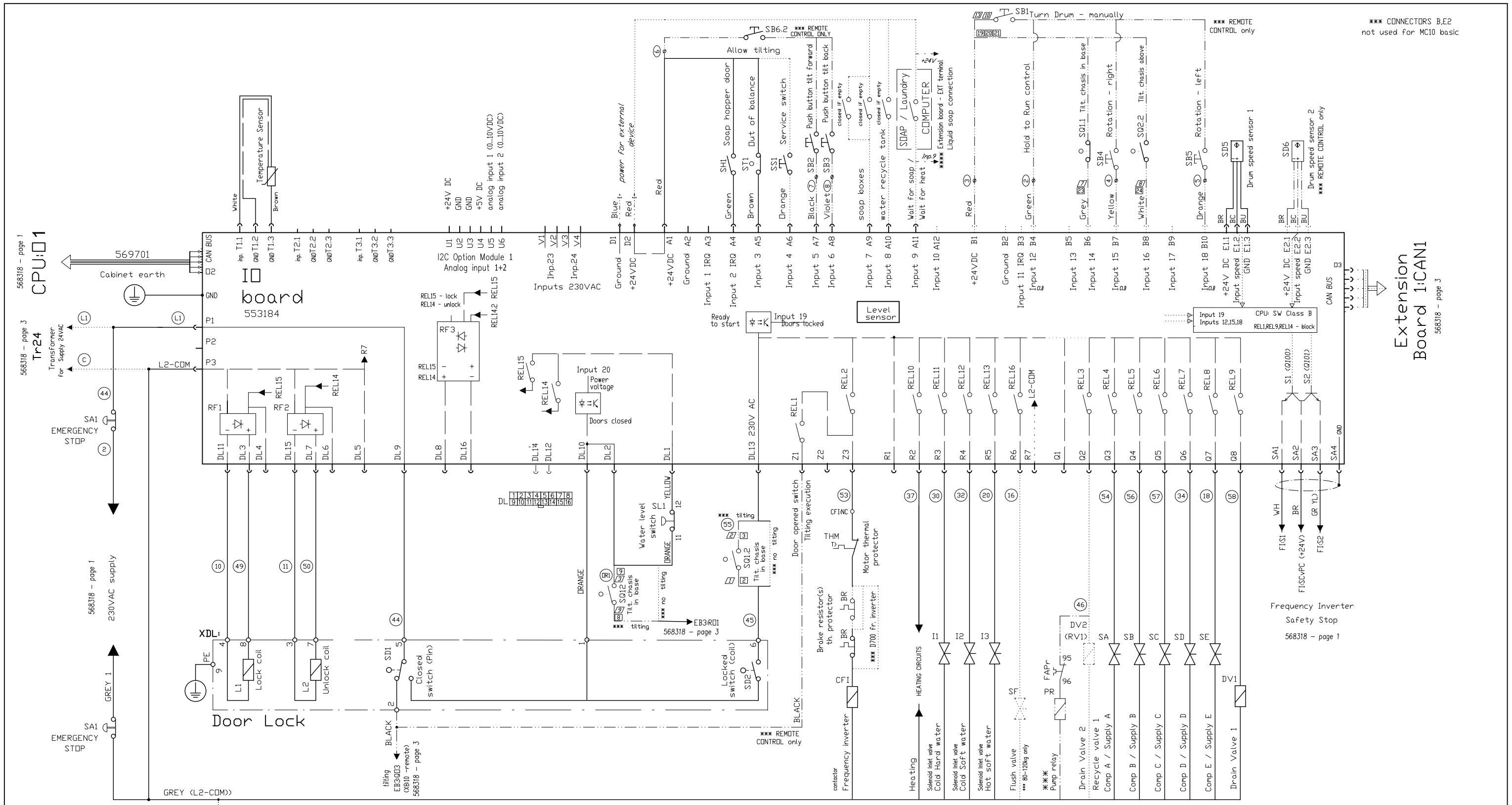

LEGEND:

- (xx) : Wire number
- : Water recuperation
- : CONNECTION POINT
- ***** : OPTION
- : OPTION
- : OPTION Tilting chassis
- : OPTION Electrical heating not for CSA/UL
- : Tilting terminal XT (35-60kg)
- : Tilting terminal XT - 80-120kg
- (x) : Remote controller terminal X8

Machine types where used	Tolerance	Roughness	Scale:	Weight:
Free -standing 35-120kg / 80-275lb			Material: Rough dimensions: Standard for rough material:	

	Date	Name
Made	10may18	PSt
Check		
Stand		

Article description

SCHEMATIC DIAGRAM washing machine - MC10 controller

Stat	Modification	Date	Name
A	add SQ12	20.12022	PSt

Main group	Article number	Page: 2
960	568 318	Pages:3

Replaces: | Replaced by:

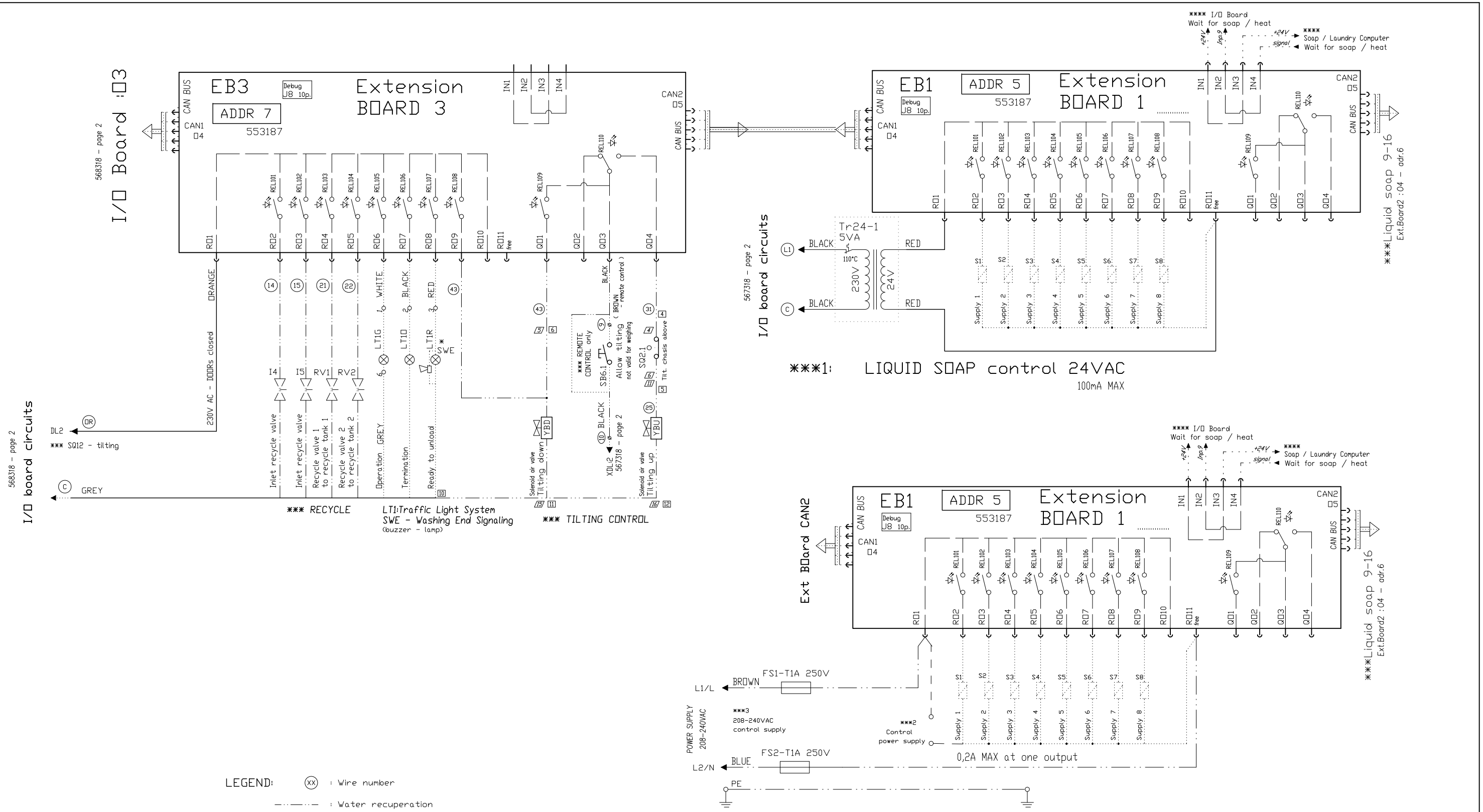

LEGEND:

- (xx) : Wire number
- —··—··— : Water recuperation
- ● : CONNECTION POINT
- ***** : OPTION
- ····· : OPTION
- —··—··— : OPTION Tilting chassis
- —··· — : OPTION Electrical heating not for CSA/UL
- (x) : Tilting terminal XT (35-60kg)
- [x] : Tilting terminal XT - 80-120kg
- (x) : Remote controller terminal X8

Machine types where used	Tolerance	Roughness	Scale:	Weight:
Free -standing 35-120kg / 80-275lb			Material: Rough dimensions: Standard for rough material:	

	Date	Name
Made	10may18	PSt
Check		
Stand		

Article description

SCHEMATIC DIAGRAM washing machine - MC10 controller

Main group	Article number	Page: 3
960	568 318	Pages:3

Stat	Modification	Date	Name
A	add SQ12	20.12022	PSt

Replaces: | Replaced by:

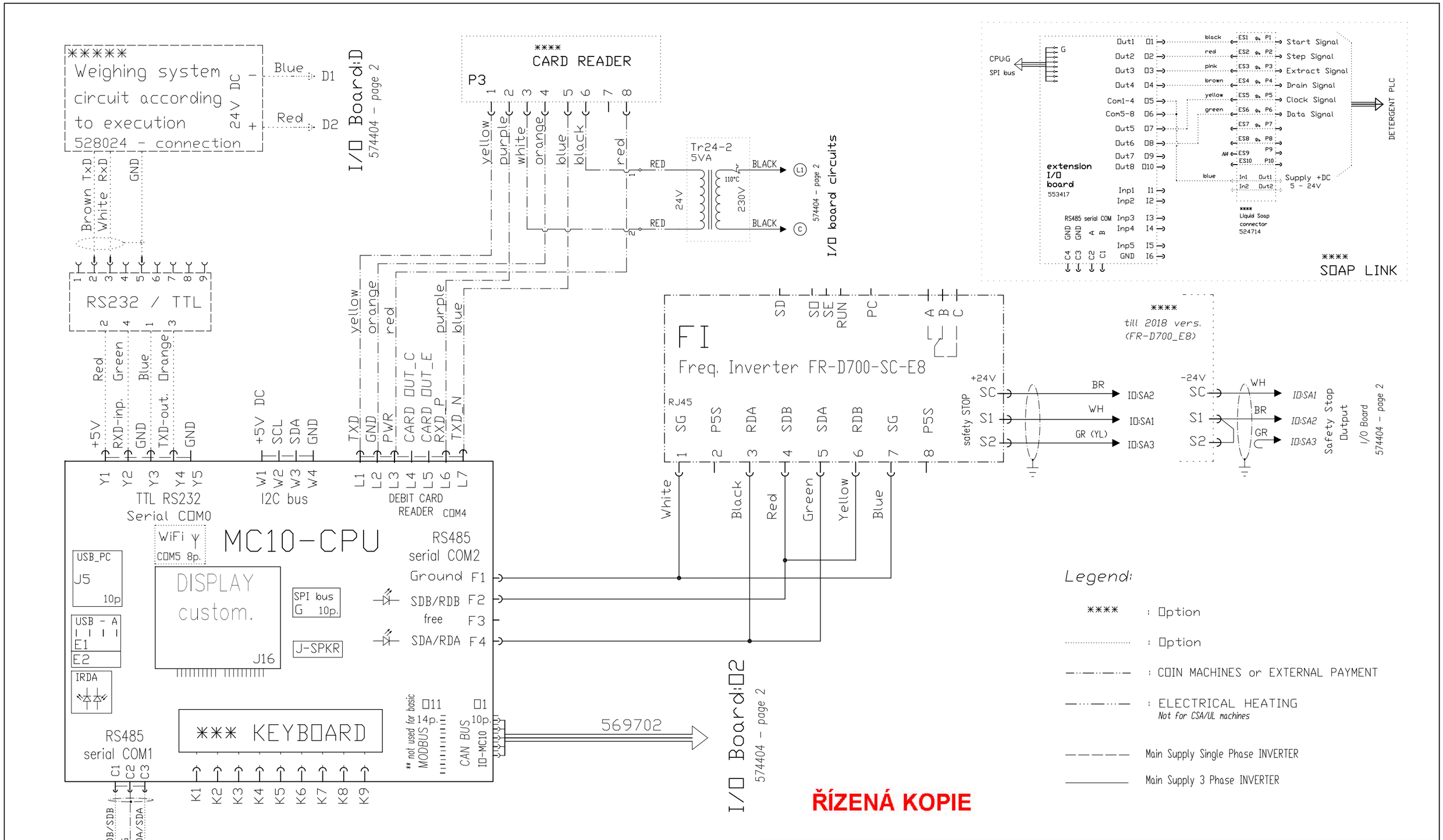

Legend:

**** : Option

..... : Option

—··—··— : COIN MACHINES or EXTERNAL PAYMENT

—···—···— : ELECTRICAL HEATING
Not for CSA/UL machines

— — — — — Main Supply Single Phase INVERTER

———— Main Supply 3 Phase INVERTER

ŘÍZENÁ KOPIE

Machine types where used	Tolerance	Roughness	Scale:	Weight:
Free standing 6,5-28kg Rigid mounted 18-28kg			Material: Rough dimensions: Standard for rough material:	

	Date	Name
Made	23apr18	PSt
Check		
Stand		

Article description

SCHEMATIC DIAGRAM washing machine - MC10 controller

Stat	Modification	Date	Name
B	Basic ex. add	22.2.2021	PSt
A	6 kW 230V 1AC	4.10.2020	PSt

Main group	Article number	Page: 1
960	574 404	Pages:3

Replaces: | Replaced by:

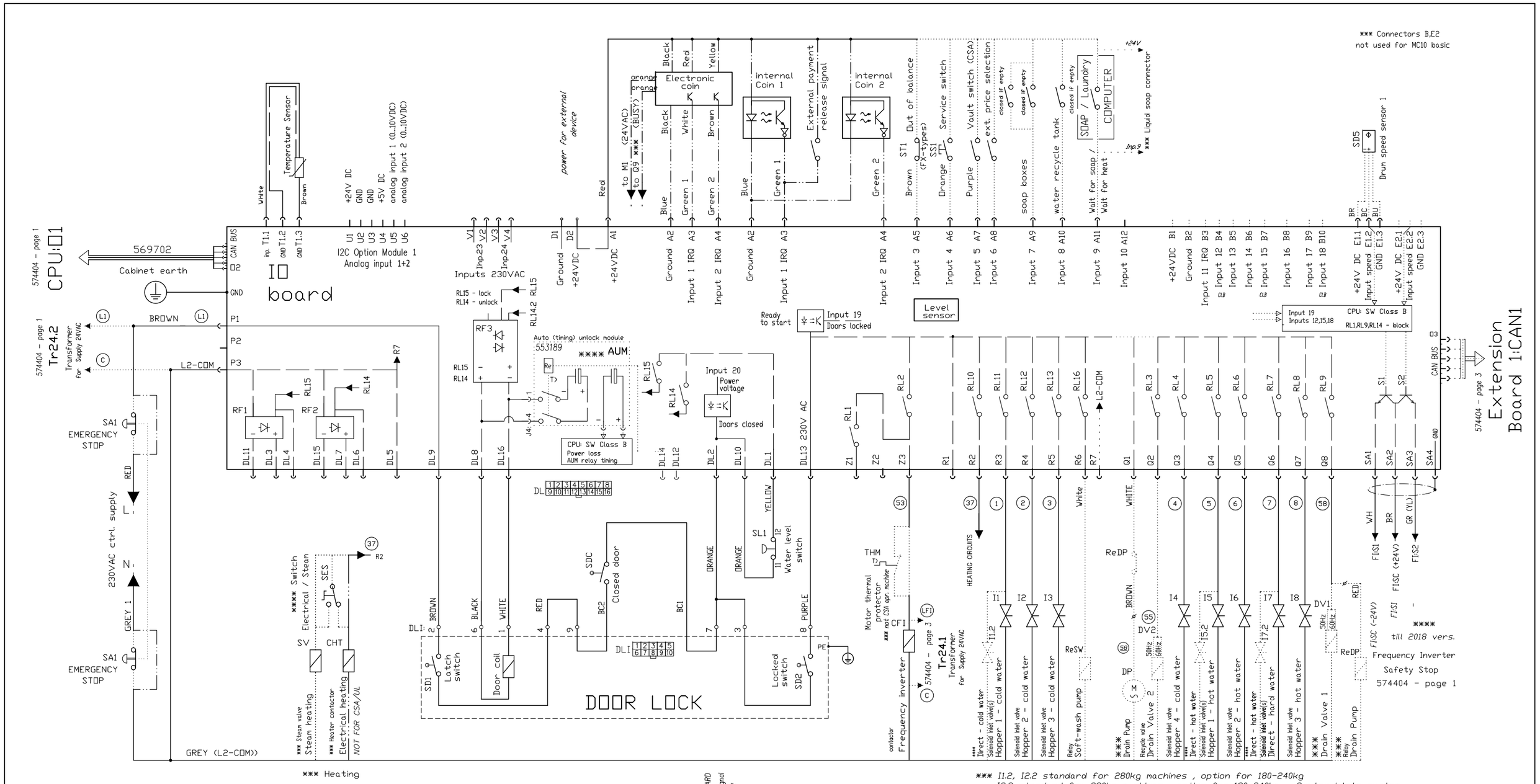

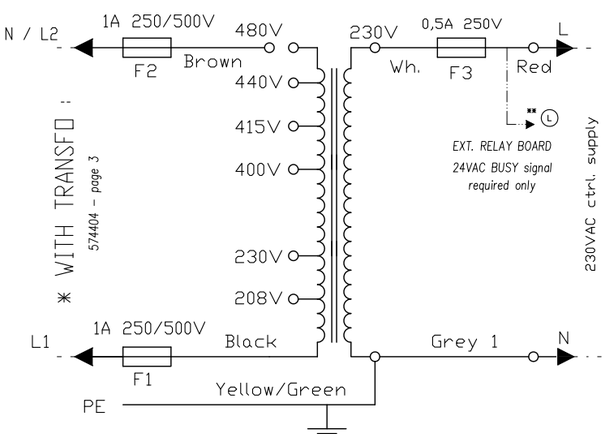

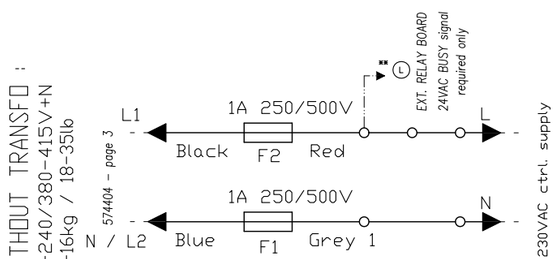

Legend:

**** : Option

..... : Option

—·—·— : COIN MACHINES or EXTERNAL PAYMENT

—··— : ELECTRICAL HEATING
Not for CSA/UL machines

ŘÍZENÁ KOPIE

Machine types where used	Tolerance	Roughness	Scale:	Weight:
Free standing 6,5-28kg Rigid mounted 18-28kg			Material: Rough dimensions: Standard for rough material:	

	Date	Name
Made	23apr18	PSt
Check		
Stand		

Stat	Modification	Date	Name
B	Basic ex. add	22.2.2021	PSt
A	6 kW 230V 1AC	4.10.2020	PSt

Article description

SCHEMATIC DIAGRAM washing machine - MC10 controller

Main group	Article number	Page: 2
960	574 404	Pages:3

Replaces: | Replaced by:

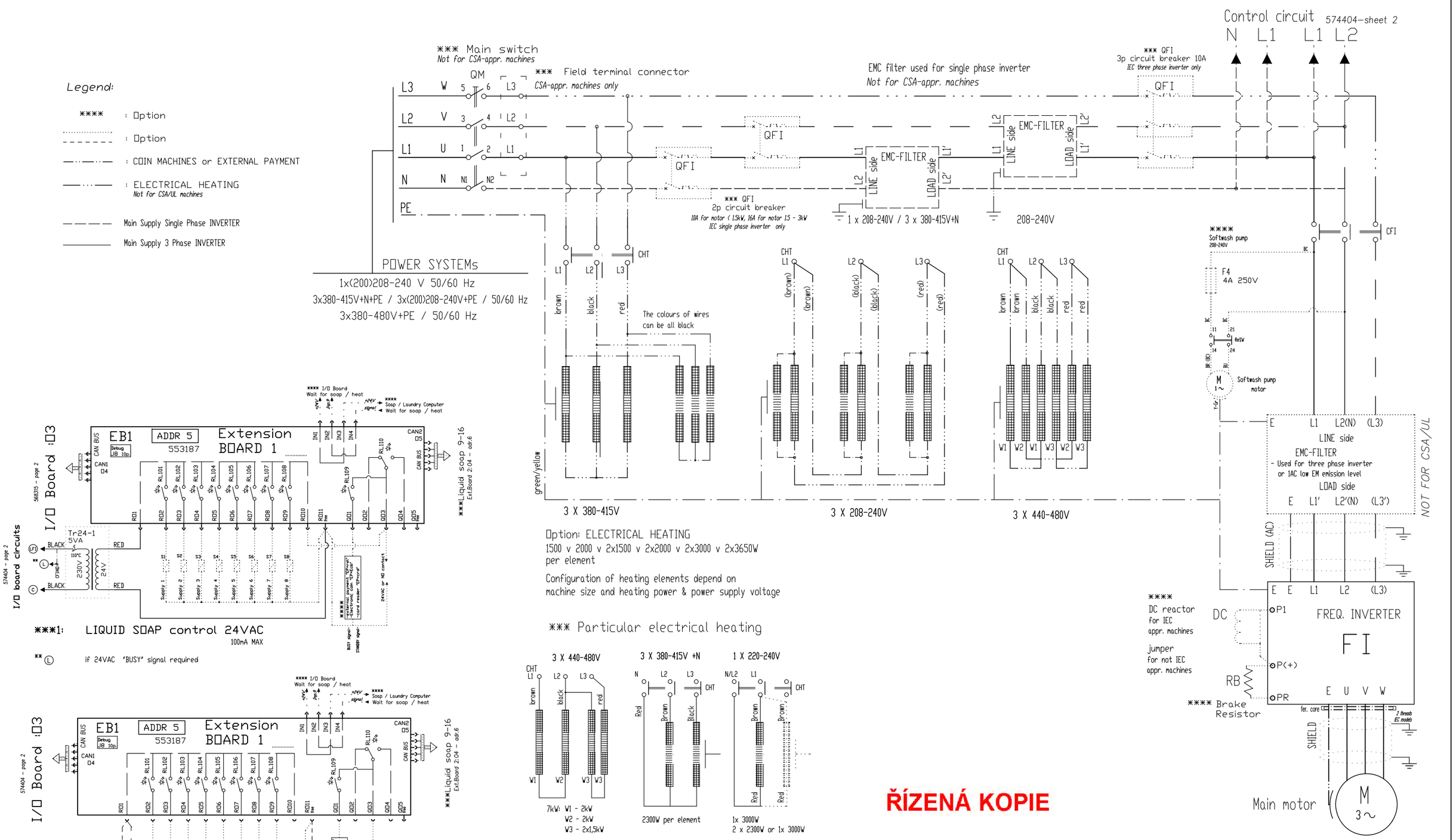

ŘÍZENÁ KOPIE

Machine types where used	Tolerance	Roughness	Scale:	Weight:
Free standing 6,5-28kg Rigid mounted 18-28kg			Material: Rough dimensions: Standard for rough material:	

	Date	Name
Made	23apr18	PSt
Check		
Stand		

Article description

SCHEMATIC DIAGRAM washing machine - MC10 controller

Stat	Modification	Date	Name
B	Basic ex. add	22.2.2021	PSt
A	6 kW 230V 1AC	4.10.2020	PSt

Main group	Article number	Page: 3
960	574 404	Pages:3

Replaces: | Replaced by:

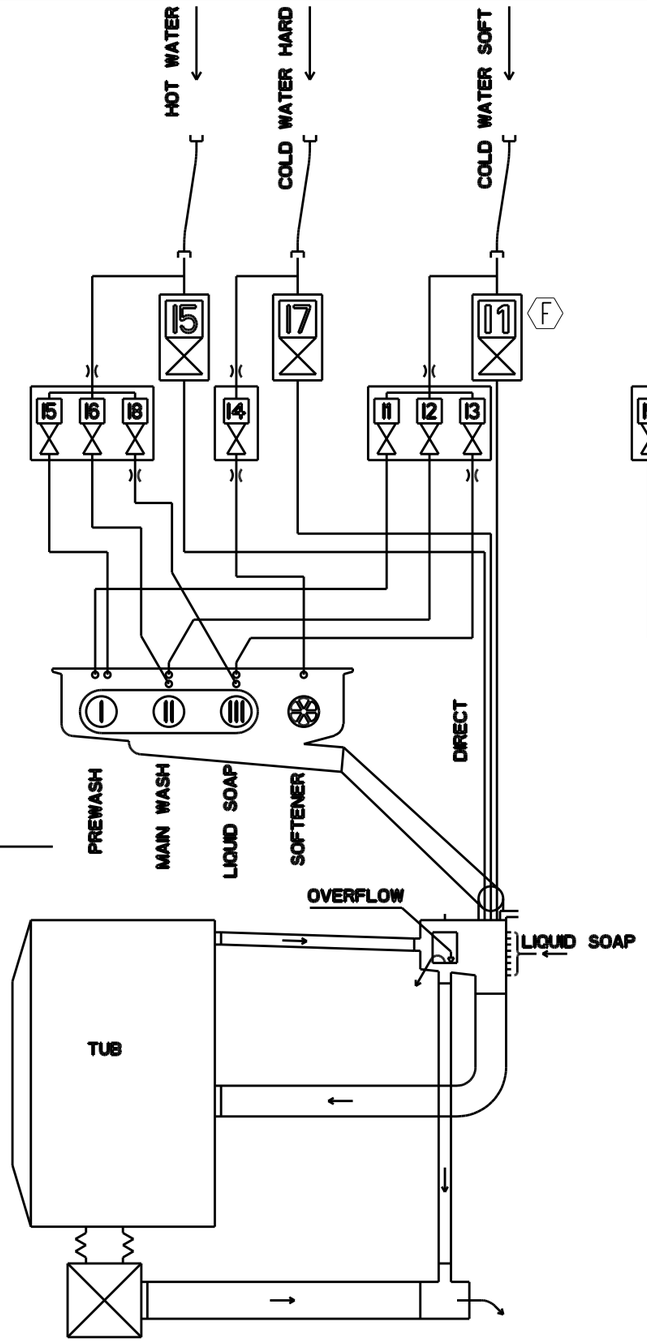

3 WATER INLET SYSTEM
WITH BIG VALVES (D)

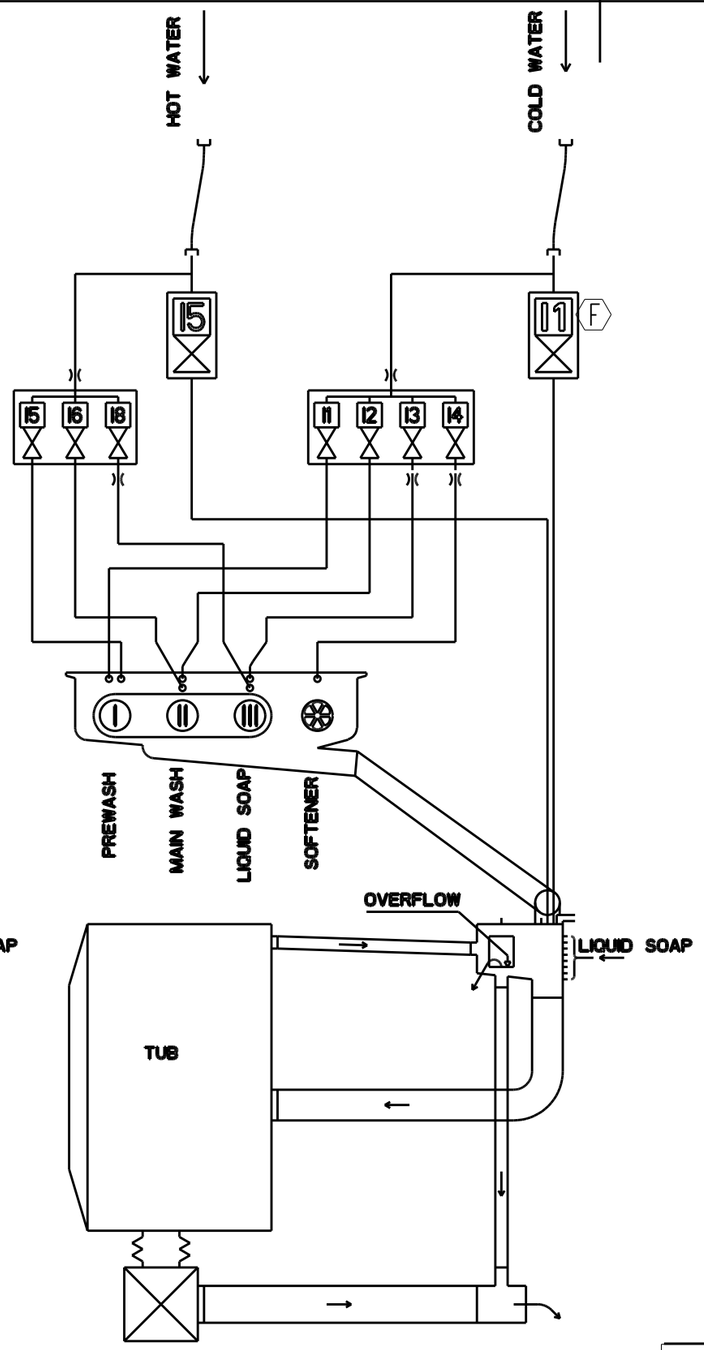

2 WATER INLET SYSTEM
WITH BIG VALVES (D)

(F) STANDARD : FX/RX280 ; RX350
OPTION : RX/FX180-240

3 WATER INLET SYSTEM

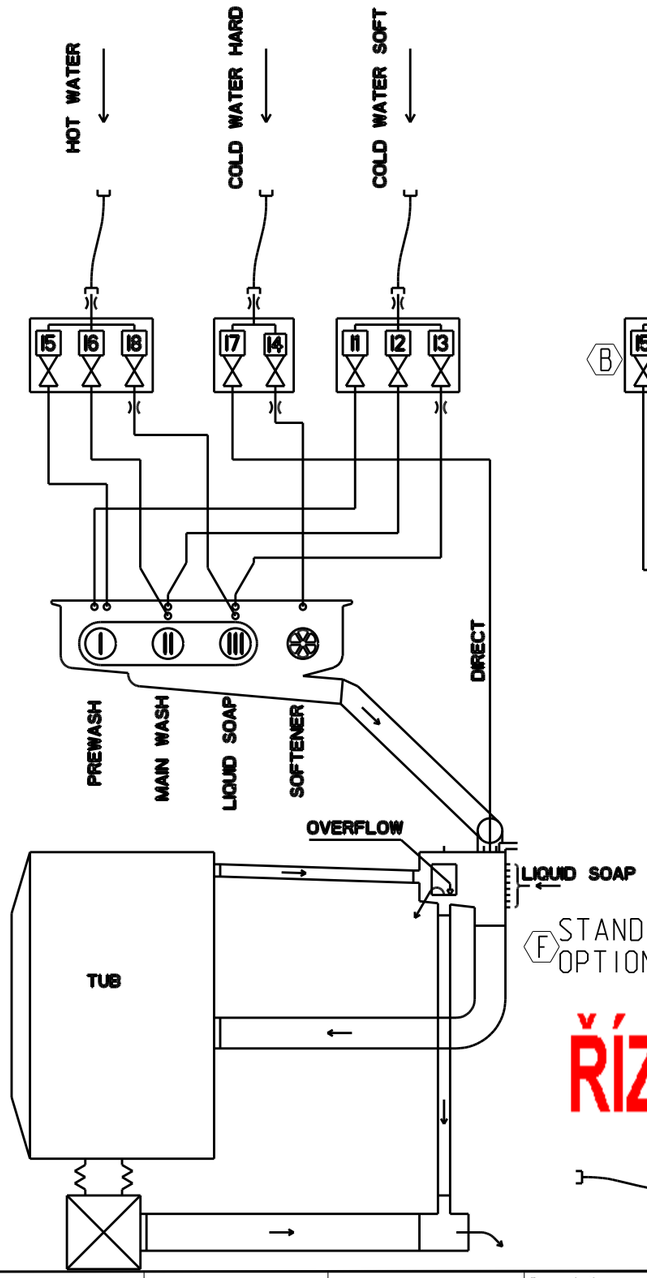

2 WATER INLET SYSTEM

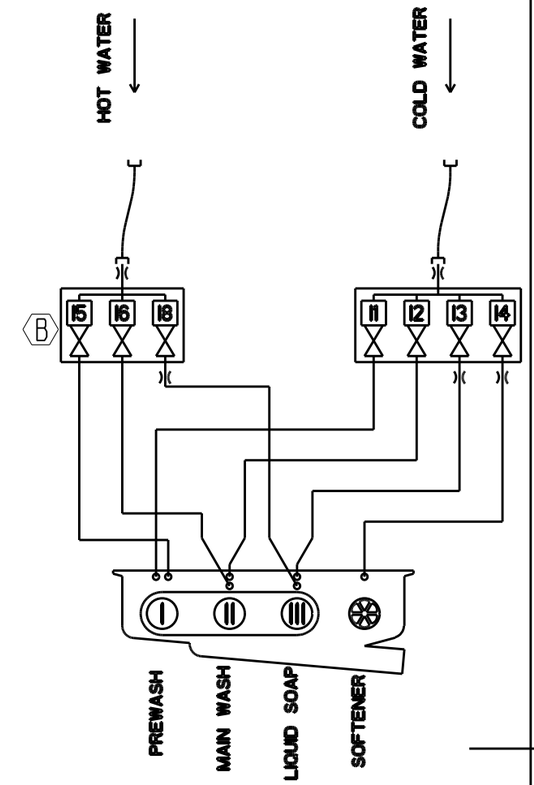

(F) STANDARD : FX65-240/RX80-240
OPTION : RX/FX280

ŘÍZENÁ KOPIE

Connection inlet hose

Restriction in the valve

Revision / Revize F	16.5.2017	Drawn by / Kreslil M.H.	Approved by / Schválil 1	Description / Popis změny I2->I1; Adding info / I2->I1; Doplněno info	ECN 4295

Tolerances and dimensions unless noted according to / Tolerance a rozměry nespecifikované jinak podle: ISO2768-mK

Name / Název: WATER PATHWAY:rigid-mount 80-350 l, soft-mount 65-280 l / VODNI CESTA:neodpružené 80-350 l, odpružené 65-280 l

Material / Materiál: -
Semi product / Polotovar: -
Standard / Norma: -

Drawing Nr. / Číslo výkresu: 526483
Revision / Revize: F

Weight / Hmotnost: 0.000
Approved by / Schválil:
Drawn by / Kreslil: A.B. 16.12.2010
ECNYY/xxx

Lifecycle state / Stav životního cyklu: Design

Unit / Jednotky: mm | Size / Format: A3 | Scale / Měřítko: 1:1 | Sheet / Strana: 1 of / z 1

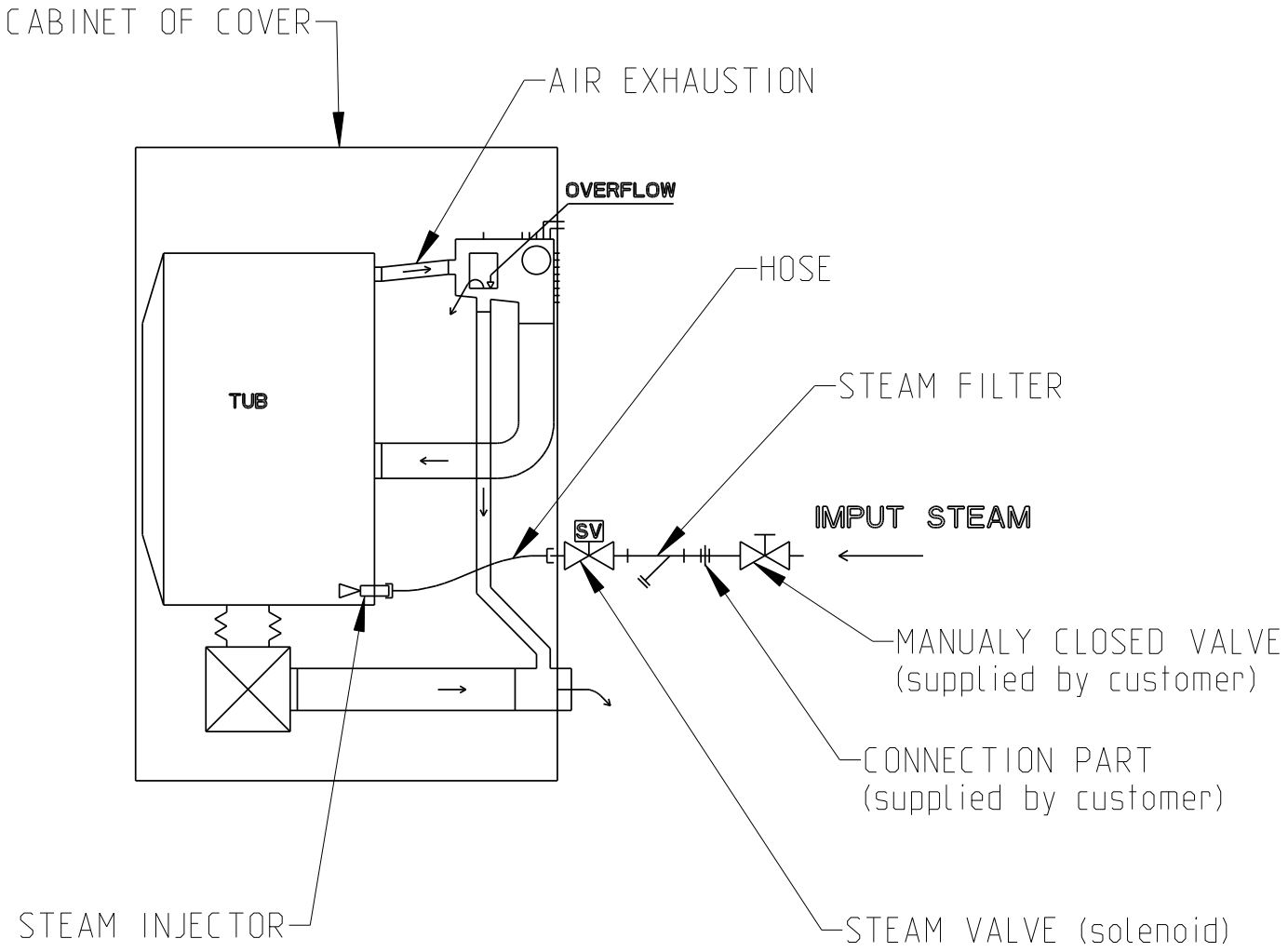

Pouzito ve strojich	Certifikat	Tolerance	Ra	Meritko: 1:1	Hmotnost: 0.000
FX	-	-		Material: - Rozmer: - Norma: -	

	Datum	Jmeno
Autor	7.6.2011	A.B.
Kontr.		
Uvolnil		

PARNI SCHEMA

primus

Reprodukce a distribuce pouze se souhlasem Primusu Duverne

Index	Zmena	Datum	Pod.	N°

Nahrazuje:		Nahrazeno kym:	
-	526559		Str.: 1 Stran: 1

ŘÍZENÁ KOPIE