Commercial Dryers

Condensing

Refer to Page 3 for Model Numbers

Parts

Alliance™ Laundry Systems

www.alliancelaundry.com

Part No. D2611R4
August 2025

Table of Contents

Title	Page
Parts Ordering Information	2
Serial Plate Location	2
Model Identification	3
Control Panel for OPL and Central Payment System	4
Control Panel for Coin models	6
Coin Meter and Coin Meter Box (Drawing 1 of 2)	8
Coin Meter and Coin Meter Box (Drawing 2 of 2)	10
Cabinet for OPL and Central Payment System	12
Cabinet for Coin models	14
Loading Door without Window	16
Access Panel for OPL	18
Access Panel for Coin and Central Payment System models	20
Front Panel and Seal	22
Motor, Belt, Exhaust Fans and Idler	24
EPP Box and Base	26
Front Bulkhead and Air Duct	28
Cylinder Assembly	30
Rear Bulkhead and Cylinder Roller	32
Terminal Block - 1 Phase Models	34
Terminal Block - 3 Phase Models	36
Rear Panel	38
Heating and Element Assembly - 1 Phase Models	40
Heating and Element Assembly - 3 Phase Models	42
I/O Control Board, Contactor and Harnesses	44
Power Cord	46
Wire Harness	48
Label Location	50
Parts Index	53

© Copyright 2025, Alliance Laundry Systems LLC

All rights reserved. No part of the contents of this book may be reproduced or transmitted in any form or by any means without the expressed written consent of the publisher.

Parts Ordering Information

If literature or replacement parts are required, contact the source from whom the machine was purchased or contact Alliance Laundry Systems at (920) 748-3950 for the name and address of the nearest authorized parts distributor.

For technical assistance, call the number listed below:

(920) 748-3121 Ripon, Wisconsin

Serial Plate Location

When calling or writing about your product, be sure to mention model and serial numbers. Model and serial numbers are located on serial plate(s) as shown.

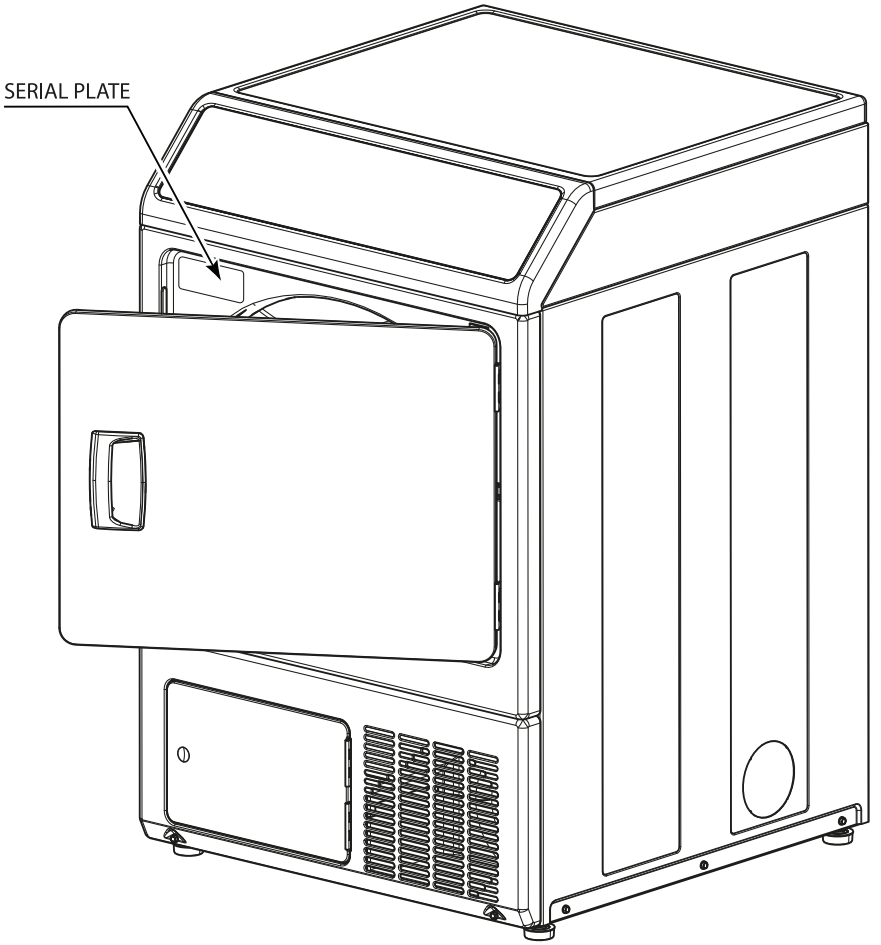

CZT407P_D2611

© Copyright, Alliance Laundry Systems LLC – DO NOT COPY or TRANSMIT

Model Identification

Information in this manual is applicable to these tumbler models:

SDCNGBGS406UG01	NDCNGBGS406UG01
SDCNGBGS456UG01	NDCNGBGS456UG01
SDCNLBGS406UG01	NDCNLBGS406UG01
SDCNLBGS456UG01	NDCNLBGS456UG01
SDCNXAGS406UG01	NDCNXAGS406UG01
SDCNXAGS456UG01	NDCNXAGS456UG01

© Copyright, Alliance Laundry Systems LLC – DO NOT COPY or TRANSMIT

Control Panel for OPL and Central Payment System

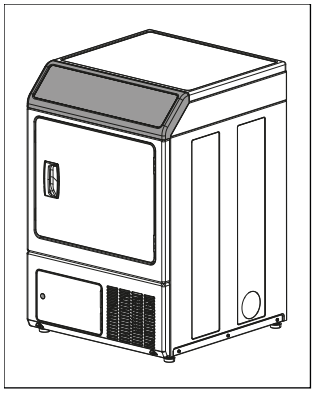

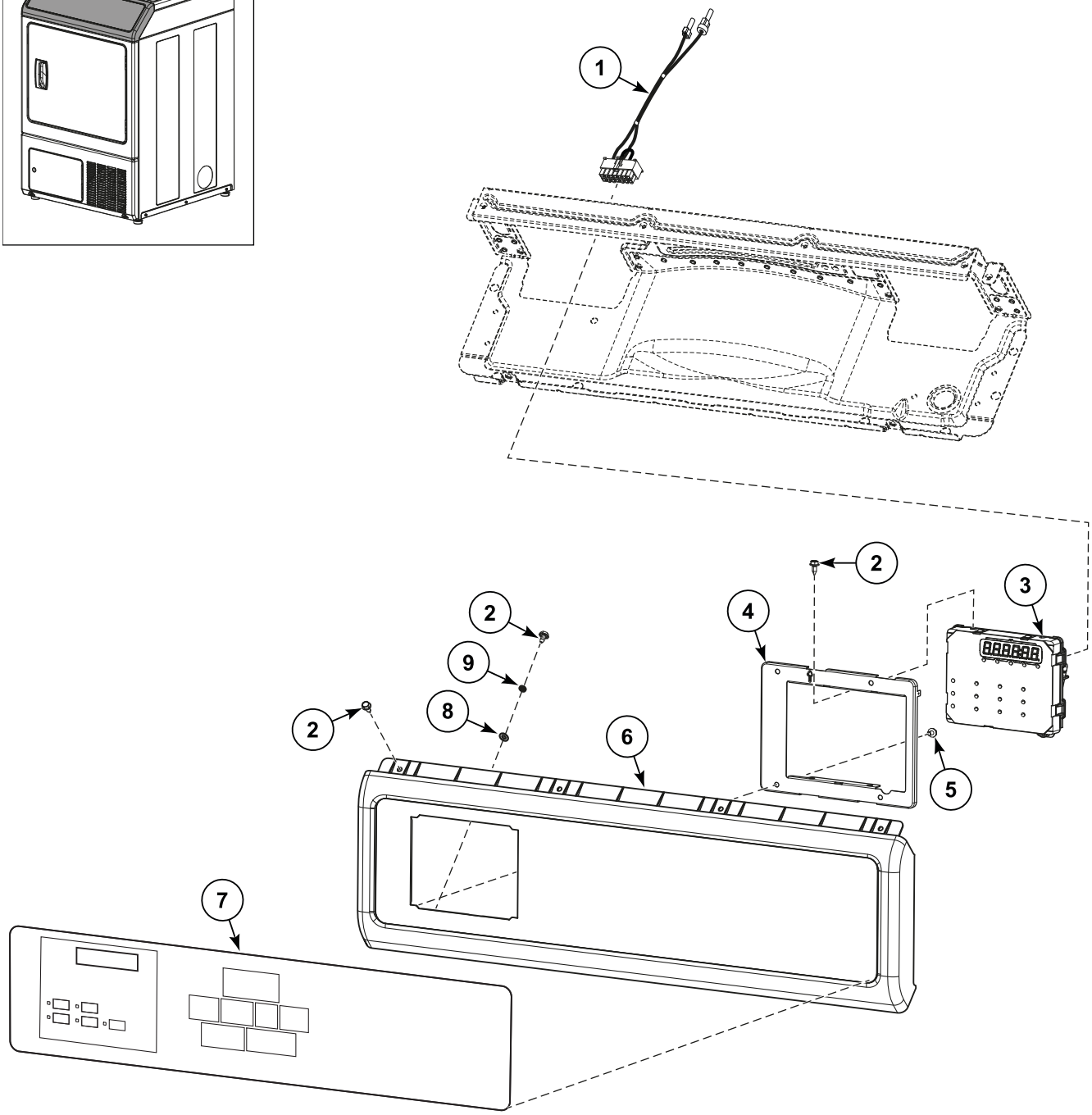

CZT421P_D2611

© Copyright, Alliance Laundry Systems LLC – DO NOT COPY or TRANSMIT

Control Panel for OPL and Central Payment System

REF	PART NO.	DESCRIPTION	COMMENTS
1	204916	Wiring Harness Assembly	
2	SP100218	Screw	
3	D518647	Control Assembly	
4	573544	Control Bracket	
5	804608	Screw	
6	807764	Control Panel Assembly	
7	D518614	Control Overlay	S models for OPL
	D518624	Control Overlay	N models for OPL
	574598	Control Overlay	S models for Central Payment System
	574600	Control Overlay	N models for Central Payment System
8	SP505430	Washer	M5
9	311679824005	Washer	M5

© Copyright, Alliance Laundry Systems LLC – DO NOT COPY or TRANSMIT

Control Panel for Coin models

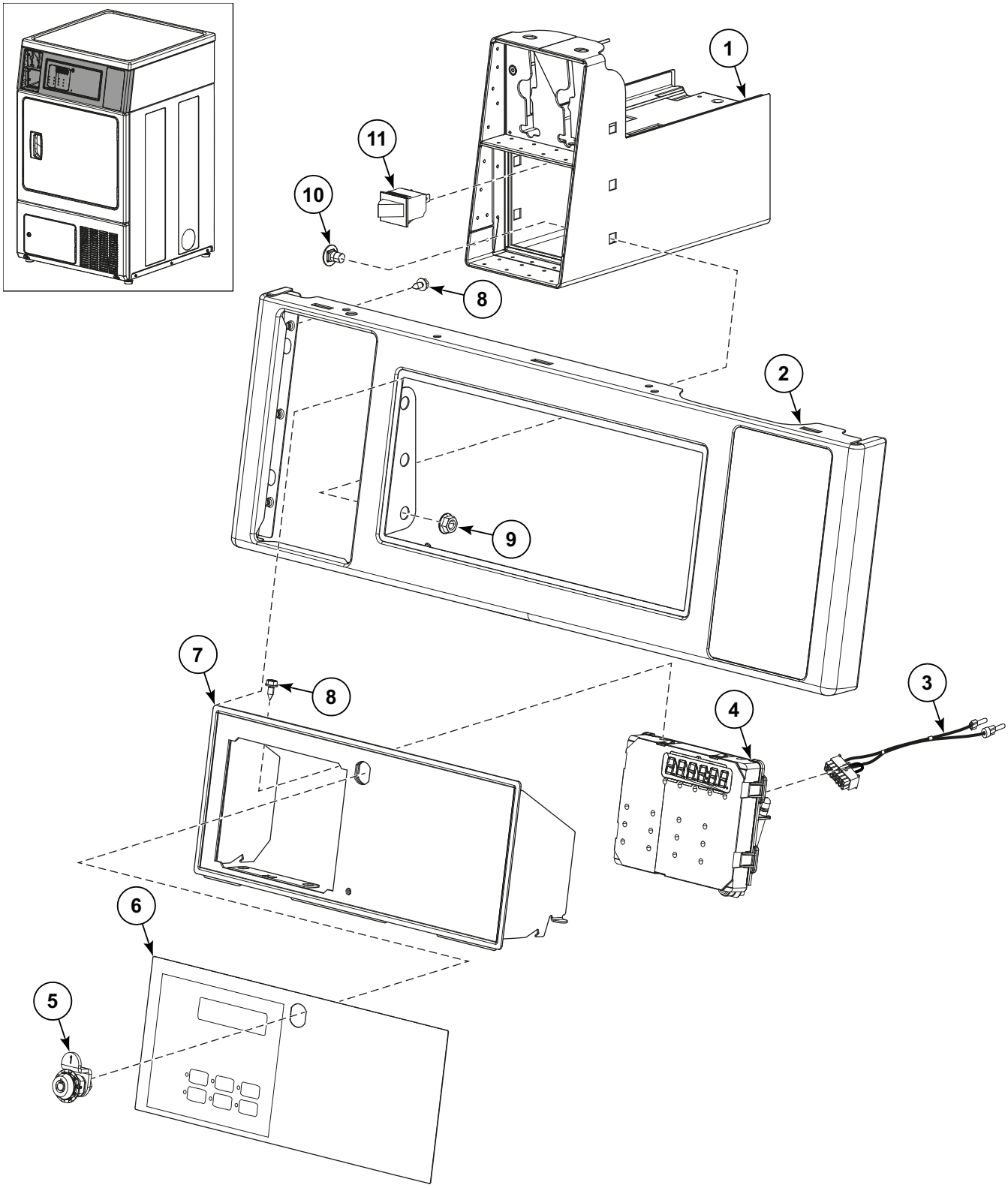

© Copyright, Alliance Laundry Systems LLC – DO NOT COPY or TRANSMIT

Control Panel for Coin models

REF	PART NO.	DESCRIPTION	COMMENTS
1	807254DG	Meter Case Assembly	
2	582122	Front Panel	10°Coin
3	204916	Wiring Harness Assembly	
4	D518647	Control Assembly	
5	582125	Lock Assembly	
6	D518059	Control Overlay	S models
	583601	Control Overlay	N models
7	582124	Control Panel Assembly	
8	SP100218	Screw	
9	44087201	Nut	
10	29651	Bolt	
11	70529301	Switch	

© Copyright, Alliance Laundry Systems LLC – DO NOT COPY or TRANSMIT

Coin Meter and Coin Meter Box (Drawing 1 of 2)

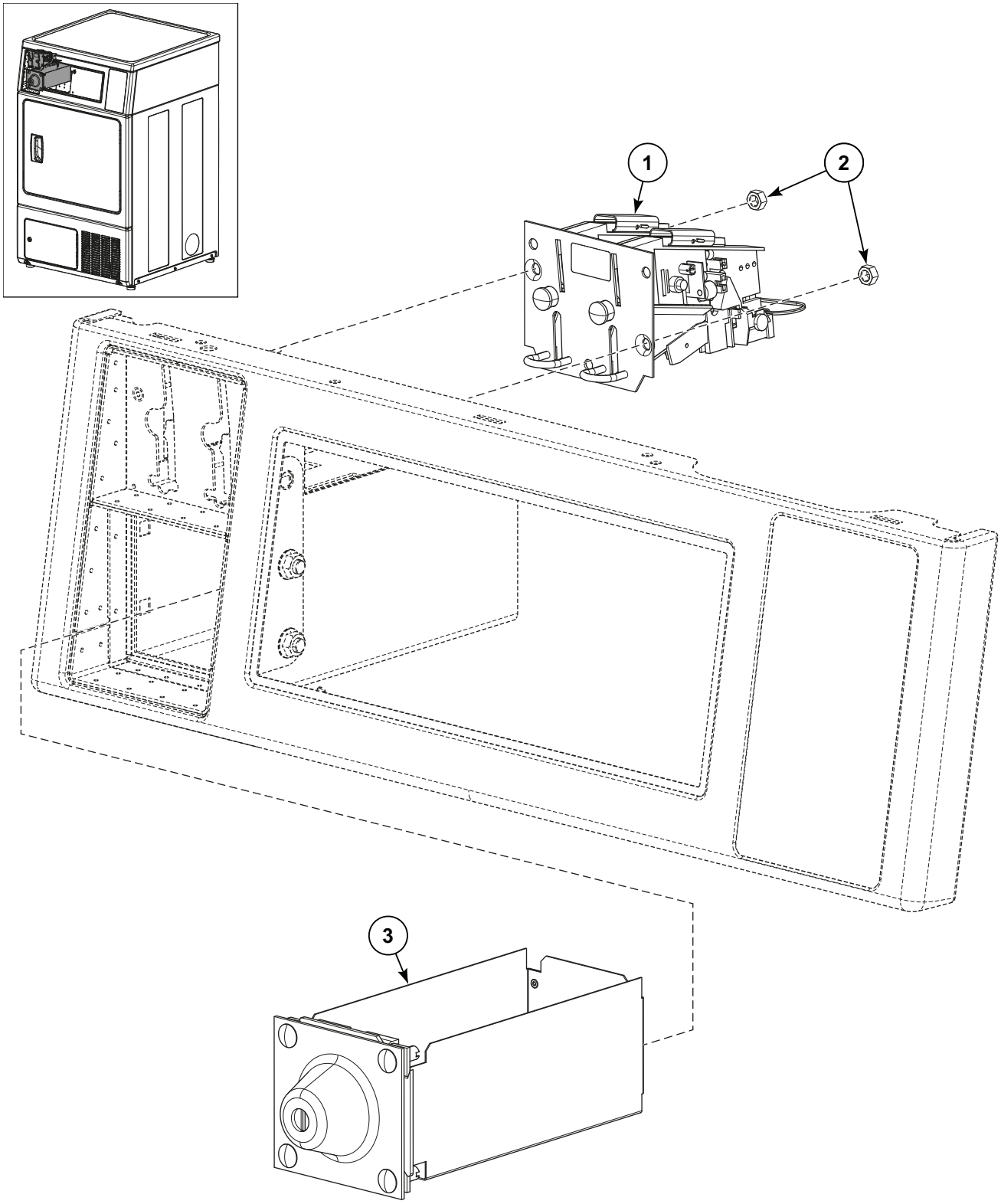

CZT508P

© Copyright, Alliance Laundry Systems LLC – DO NOT COPY or TRANSMIT

Coin Meter and Coin Meter Box (Drawing 1 of 2)

REF	PART NO.	DESCRIPTION	COMMENTS
1	101982	Coin Meter	1EUR
	101531	Coin Meter	0.5EUR
	101532	Coin Meter	0.2EUR + 0.5EUR
	101633	Coin Meter	0.5EUR + 1EUR
	102057	Coin Meter	1AUD + 2AUD
	102082	Coin Meter	10TWD + 50TWD
	102451	Coin Meter	0.2EUR + 1EUR
	102593	Coin Meter	0.2GBP + 1GBP
	102605	Coin Meter	0.5GBP
	548531	Coin Meter	Jeton CARSEN D22 2 Grooves
	552580	Coin Meter	Jeton 5K
	552581	Coin Meter	Jeton 7K
	552582	Coin Meter	Jeton 10K
	553142	Coin Meter	Token SUPER; Electronic EMPv7
	553143	Coin Meter	Won 500
	553146	Coin Meter	AUD/NZD/HKD/KRW; Electronic EMPv7
	553147	Coin Meter	1HRK, 2HRK, 5HRK; Electronic EMPv7
	553148	Coin Meter	1USD
	553149	Coin Meter	0.25USD
	553153	Coin Meter	20CZK + 50CZK
	553157	Coin Meter	100YEN
	553166	Coin Meter	2PLN + 5PLN
	553192	Coin Meter	2DKK
	553193	Coin Meter	Philippine peso; Electronic EMPv7
	553194	Coin Meter	NZD; Electronic EMPv7
	555929	Coin Meter	1AUD
	556035	Coin Meter	2PLN
	560701	Coin Meter	0.5MYR
	560709	Coin Meter	0.5MYR + 0.5MYR
	560710	Coin Meter	20CZK
	560711	Coin Meter	1SGD
	560712	Coin Meter	1OLD SGP
	560713	Coin Meter	1SGD + 1OLD SGP
	560732	Coin Meter	500KRW
	560738	Coin Meter	1SGD NEW + 1SGD OLD; Electronic EMPv7
	560740	Coin Meter	Jeton A.S.A.R.D.
	560741	Coin Meter	5CZK, 10CZK, 20CZK, 50CZK/Jeton 7K; Electronic EMPv7
	560782	Coin Meter	1EUR + 2EUR
	560783	Coin Meter	5PLN
	560784	Coin Meter	MYR; Electronic EMPv7
	560794	Coin Meter	Jeton B
	560796	Coin Meter	Jeton TOP MOS
2	RSP29786	Nut	
3	570562	Coin Meter Box	

© Copyright, Alliance Laundry Systems LLC – DO NOT COPY or TRANSMIT

Coin Meter and Coin Meter Box (Drawing 2 of 2)

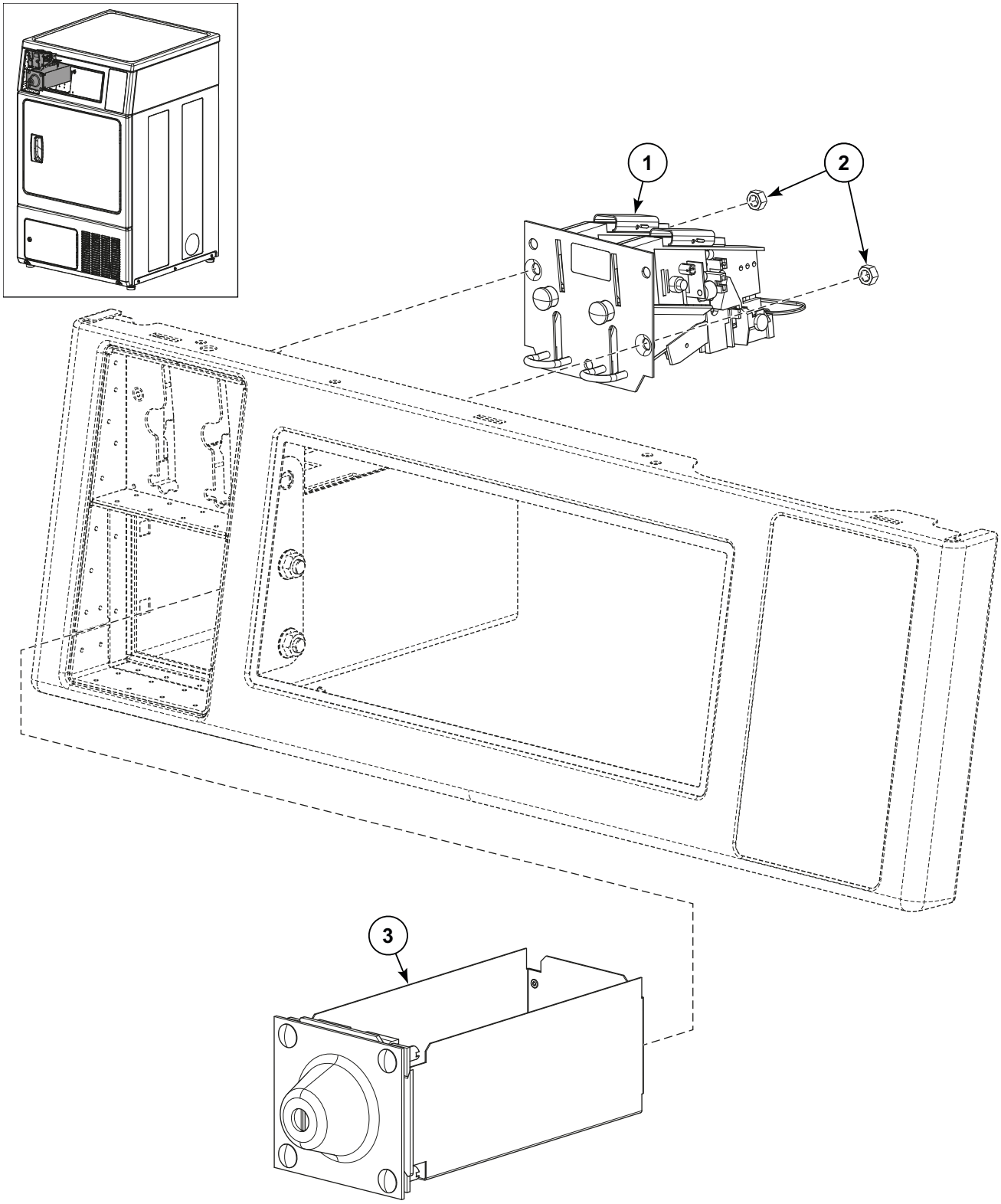

CZT508P

© Copyright, Alliance Laundry Systems LLC – DO NOT COPY or TRANSMIT

Coin Meter and Coin Meter Box (Drawing 2 of 2)

REF	PART NO.	DESCRIPTION	COMMENTS
1	564820	Coin Meter	10CZK + 20CZK
	568018	Coin Meter	0.5CH/2CH
	569908	Coin Meter	PLN + EUR + ISK
	569910	Coin Meter	10NOK
	569913	Coin Meter	Jeton 15K IPSO
	569917	Coin Meter	2EUR + 0.5EUR
	569989	Coin Meter	Jeton HAUCK 2018
	569994	Coin Meter	Jeton D
	572330	Coin Meter	0.5GEL + 1GEL + 2GEL; Electronic EMPv7
	572331	Coin Meter	1ILS + 2ILS + 5ILS + 10ILS; Electronic EMPv7
	572332	Coin Meter	0.2EUR + 0.5EUR + 1EUR + 2EUR/Jeton 7K PRIMUS; Electronic EMPv7
	572333	Coin Meter	20HUF + 50HUF + 100HUF + 200HUF; Electronic EMPv7
	572356	Coin Meter	Jeton King of Games
	572357	Coin Meter	THB; Electronic EMPv7
	572382	Coin Meter	10MAD
	572387	Coin Meter	0.2CH + 0.5CH + 1CH + 2CH; Electronic EMPv7
	579807	Coin Meter	1AED; Electronic EMPv7
	579817	Coin Meter	20HUF + 50HUF + 100HUF + 200HUF; Electronic EMPv7
	579858	Coin Meter	100CVE + 50CVE; Electronic EMPv7
	579861	Coin Meter	Jeton 15K PRIMUS
	579866	Coin Meter	EUR/118-5 Jeton; Electronic EMPv7
	579869	Coin Meter	USD/CAD; Electronic EMPv7
	579870	Coin Meter	0.1EUR + 0.2EUR + 0.5EUR + 1EUR + 2EUR/Jeton 5K IPSO; Electronic EMPv7
	70513302	Coin Meter	GBP/EUR; Electronic EMPv7
2	RSP29786	Nut	
3	570562	Coin Meter Box	

© Copyright, Alliance Laundry Systems LLC – DO NOT COPY or TRANSMIT

Cabinet for OPL and Central Payment System

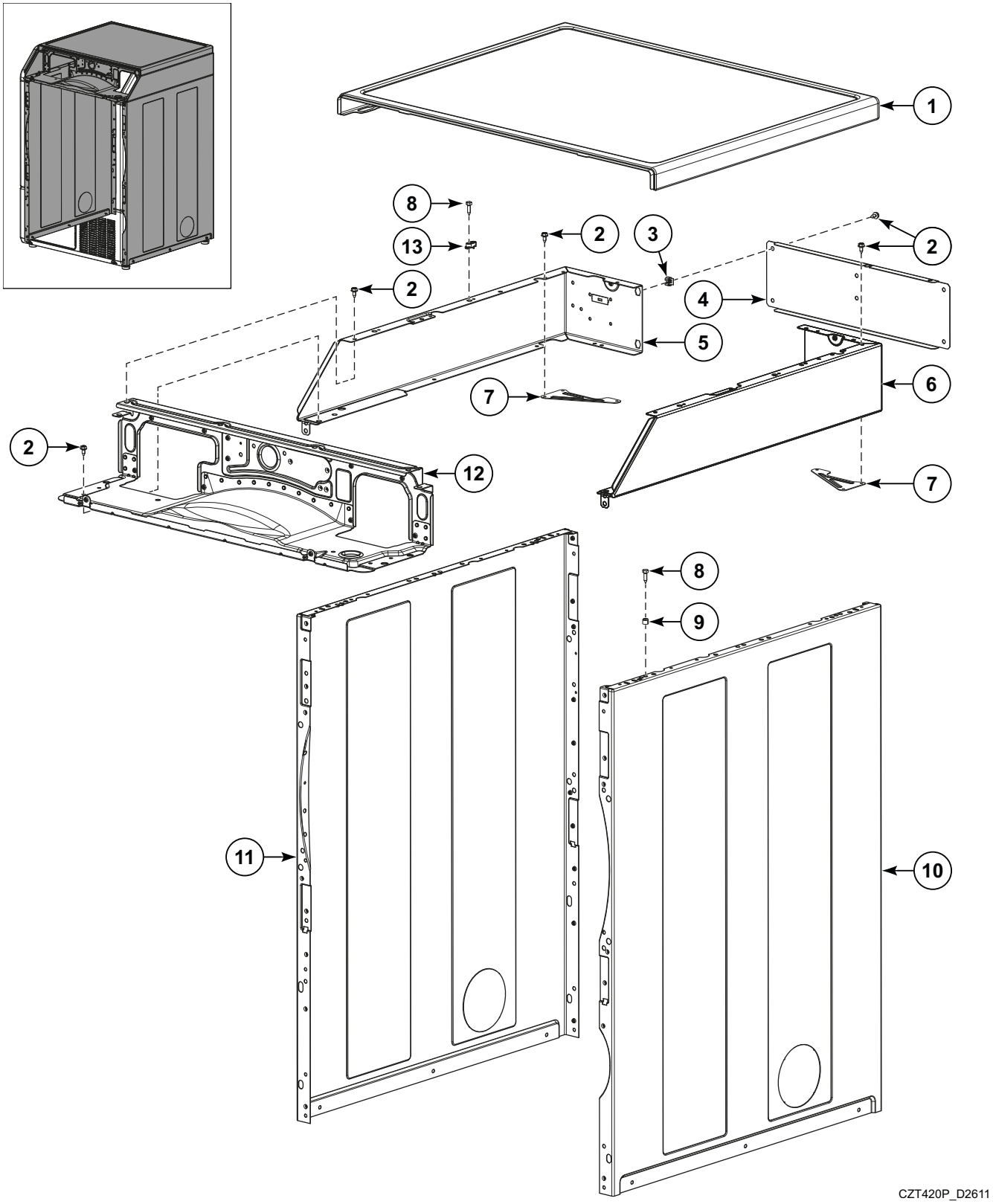

© Copyright, Alliance Laundry Systems LLC – DO NOT COPY or TRANSMIT

Cabinet for OPL and Central Payment System

REF	PART NO.	DESCRIPTION	COMMENTS
1	573568	Top Panel	
2	SP100218	Screw	
3	70030501	Expansion Clip	
4	573558	Rear Access Panel	
5	573564	Control Wrapper	Painted; Left
6	573563	Control Wrapper	Painted; Right
7	573559	Rear Wrapper Brace	
8	SP520871	Screw	
9	56079	Panel Locator	
10	573566	Cabinet Side Panel	Painted; Right
11	573567	Cabinet Side Panel	Painted; Left
12	804613	Top Panel Brace Assembly	
13	803761	Top Panel Guide	

© Copyright, Alliance Laundry Systems LLC – DO NOT COPY or TRANSMIT

Cabinet for Coin models

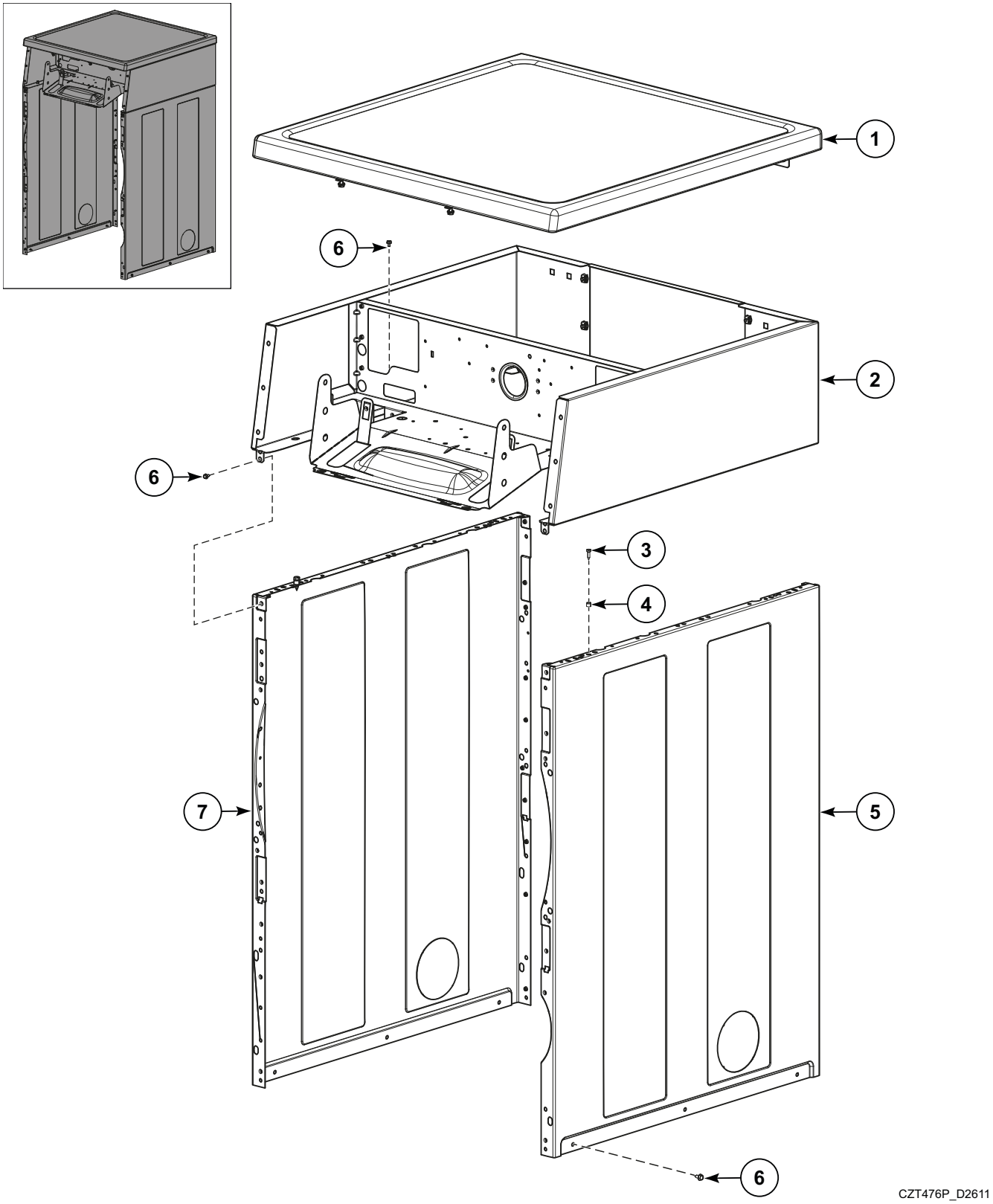

© Copyright, Alliance Laundry Systems LLC – DO NOT COPY or TRANSMIT

Cabinet for Coin models

REF	PART NO.	DESCRIPTION	COMMENTS
1	582121	Top Panel	Includes hinges
2	582114	Wrapper Assembly	
3	SP520871	Screw	
4	56079	Panel Locator	
5	573566	Cabinet Side Panel	Painted; Right
6	SP100218	Screw	
7	573567	Cabinet Side Panel	Painted; Left

© Copyright, Alliance Laundry Systems LLC – DO NOT COPY or TRANSMIT

Loading Door without Window

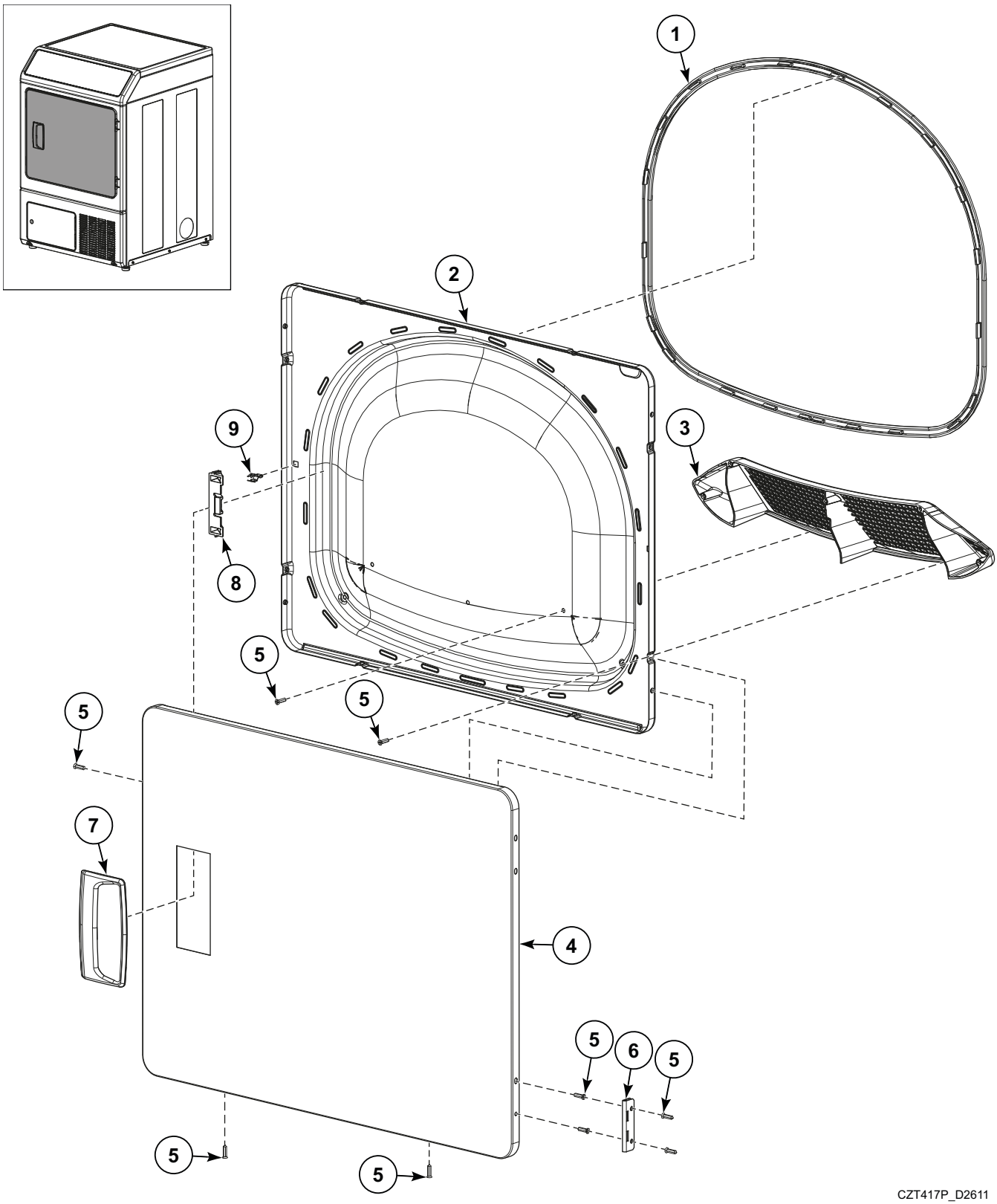

© Copyright, Alliance Laundry Systems LLC – DO NOT COPY or TRANSMIT

Loading Door without Window

REF	PART NO.	DESCRIPTION	COMMENTS
1	573540	Liner Door Seal	
2	D516508	Door Liner Assembly	Includes seal item 1
3	D503870W	Door Liner Grill	White
4	573565	Dryer Door	Painted
5	D500226	Screw	
6	D511036	Hinge	
7	D512947	Door Pull	Light gray
8	D510129W	Door Handle Wedge	
9	D510181	Door Strike	

© Copyright, Alliance Laundry Systems LLC – DO NOT COPY or TRANSMIT

Access Panel for OPL

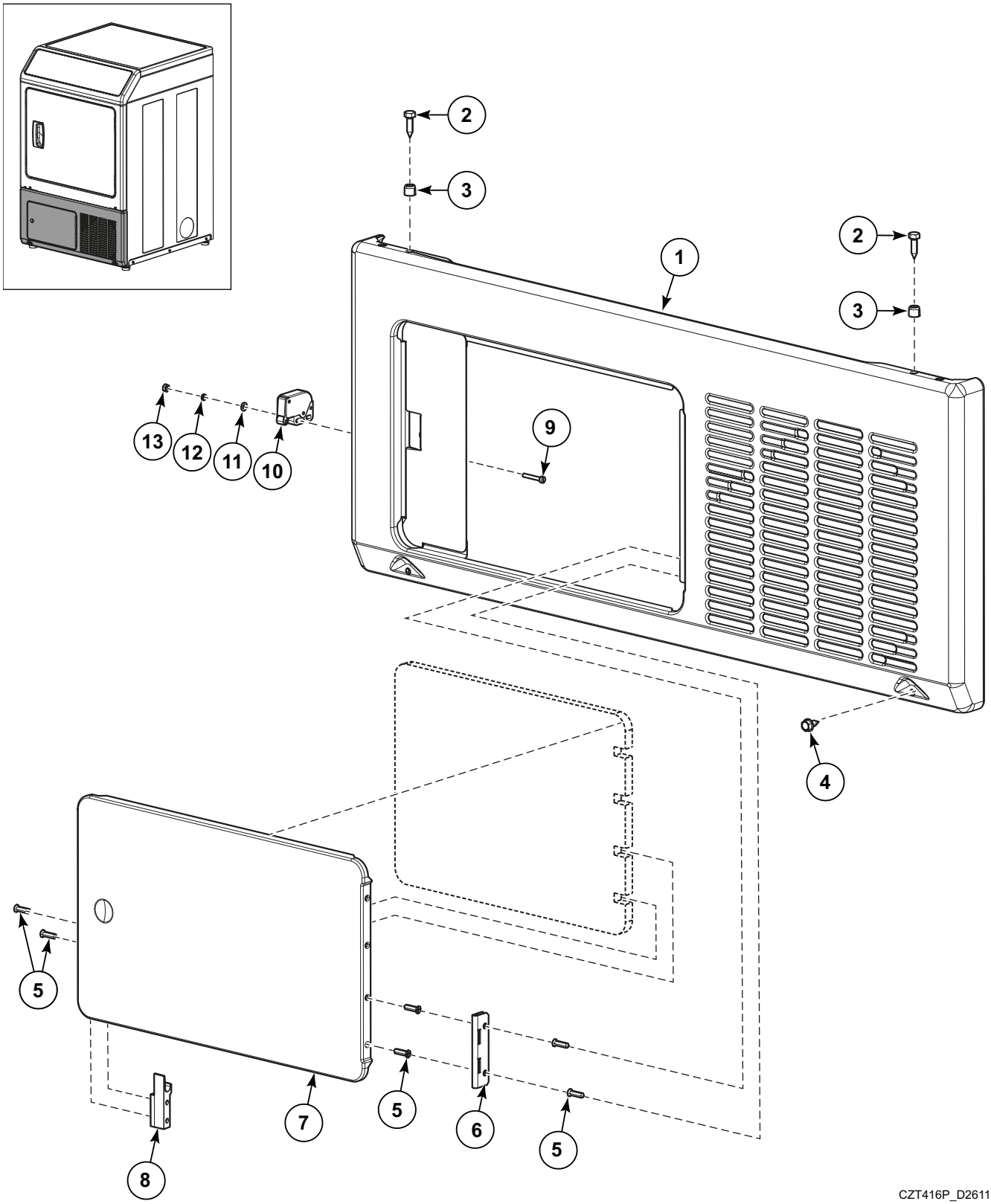

© Copyright, Alliance Laundry Systems LLC – DO NOT COPY or TRANSMIT

Access Panel for OPL

REF	PART NO.	DESCRIPTION	COMMENTS
1	D518483DG	Access Panel Assembly	Dark gray
2	SP520871	Screw	
3	56079	Panel Locator	
4	SP100218	Screw	
5	D500226	Screw	
6	D511036	Hinge	
7	579245	Access Panel Door Assembly	Includes seal, item 8 and 2 pcs of item 5
8	D518363	Lock Latch	
9	SP309084000320	Screw	
10	D518447	Spring Latch	
11	SP311125000003	Washer	
12	SP311127000003	Washer	
13	SP310934000003	Nut	

© Copyright, Alliance Laundry Systems LLC – DO NOT COPY or TRANSMIT

Access Panel for Coin and Central Payment System models

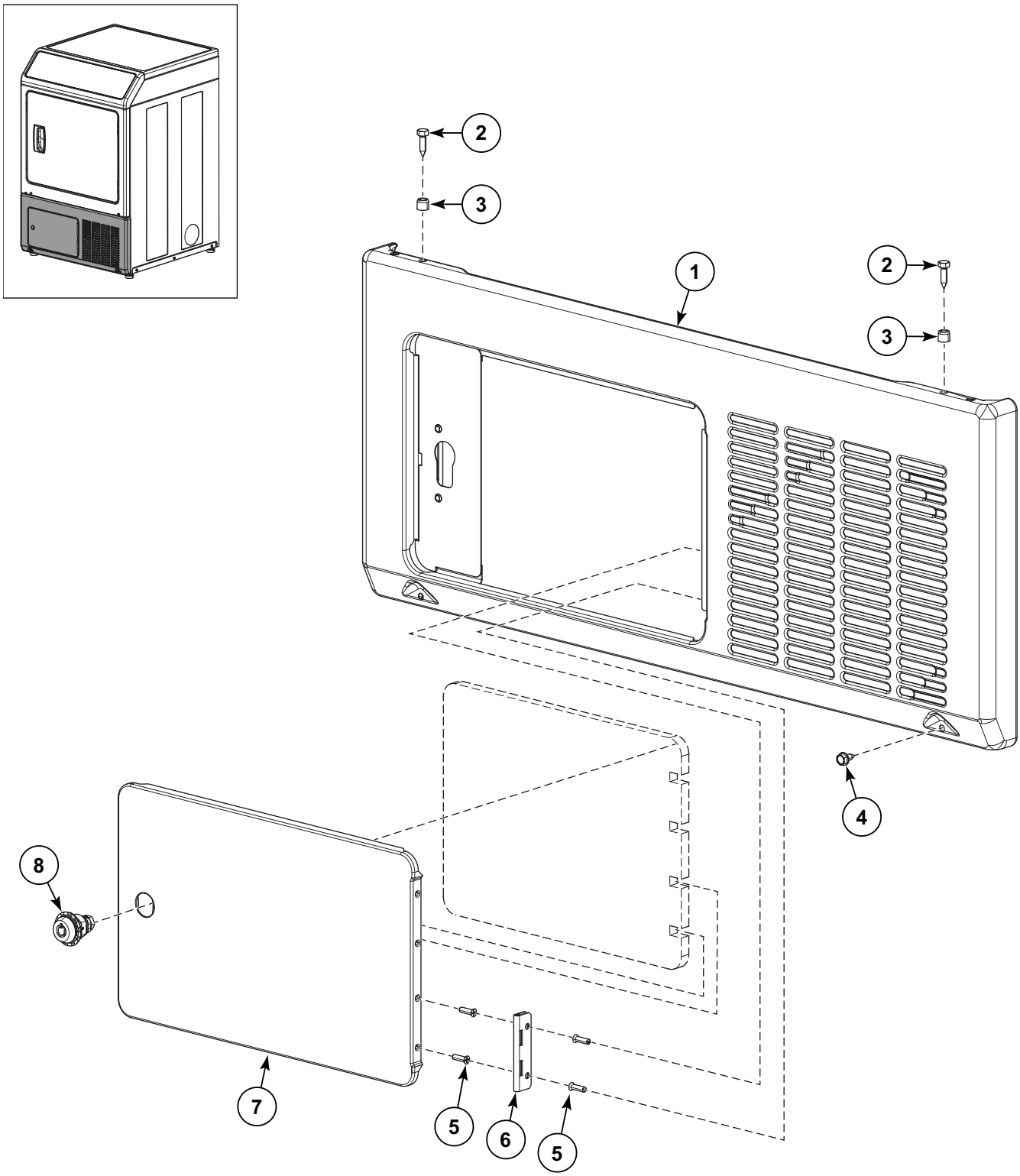

CZT477P_D2611

© Copyright, Alliance Laundry Systems LLC – DO NOT COPY or TRANSMIT

Access Panel for Coin and Central Payment System models

REF	PART NO.	DESCRIPTION	COMMENTS
1	582112	Access Panel Assembly	Dark gray
2	SP520871	Screw	
3	56079	Panel Locator	
4	SP100218	Screw	
5	D500226	Screw	
6	D511036	Hinge	
7	582117	Access Panel Door Assembly	Includes seal
8	582126	Lock Assembly	

© Copyright, Alliance Laundry Systems LLC – DO NOT COPY or TRANSMIT

Front Panel and Seal

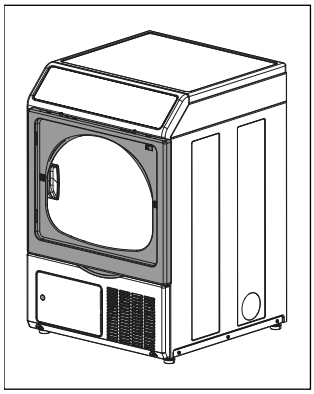

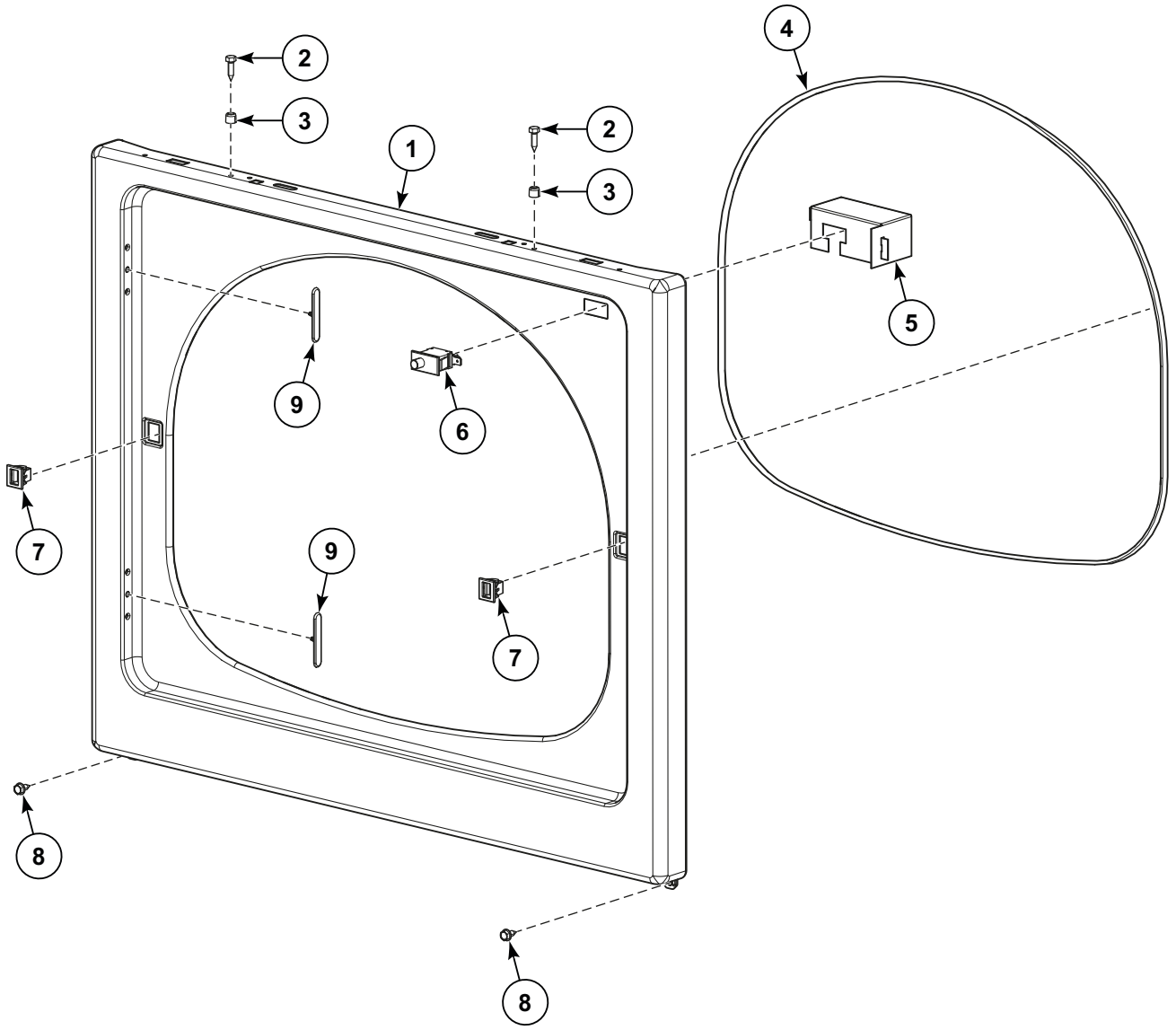

© Copyright, Alliance Laundry Systems LLC – DO NOT COPY or TRANSMIT

Front Panel and Seal

REF	PART NO.	DESCRIPTION	COMMENTS
1	573569	Front Panel	Painted
2	SP520871	Screw	
3	56079	Panel Locator	
4	582413	Front Panel Seal	
5	D514327	Drip Shield	
6	D512973	Switch	
7	D510177	Door Catch Assembly	
8	D503688	Screw	
9	D510186	Hinge Hole Plug	

© Copyright, Alliance Laundry Systems LLC – DO NOT COPY or TRANSMIT

Motor, Belt, Exhaust Fans and Idler

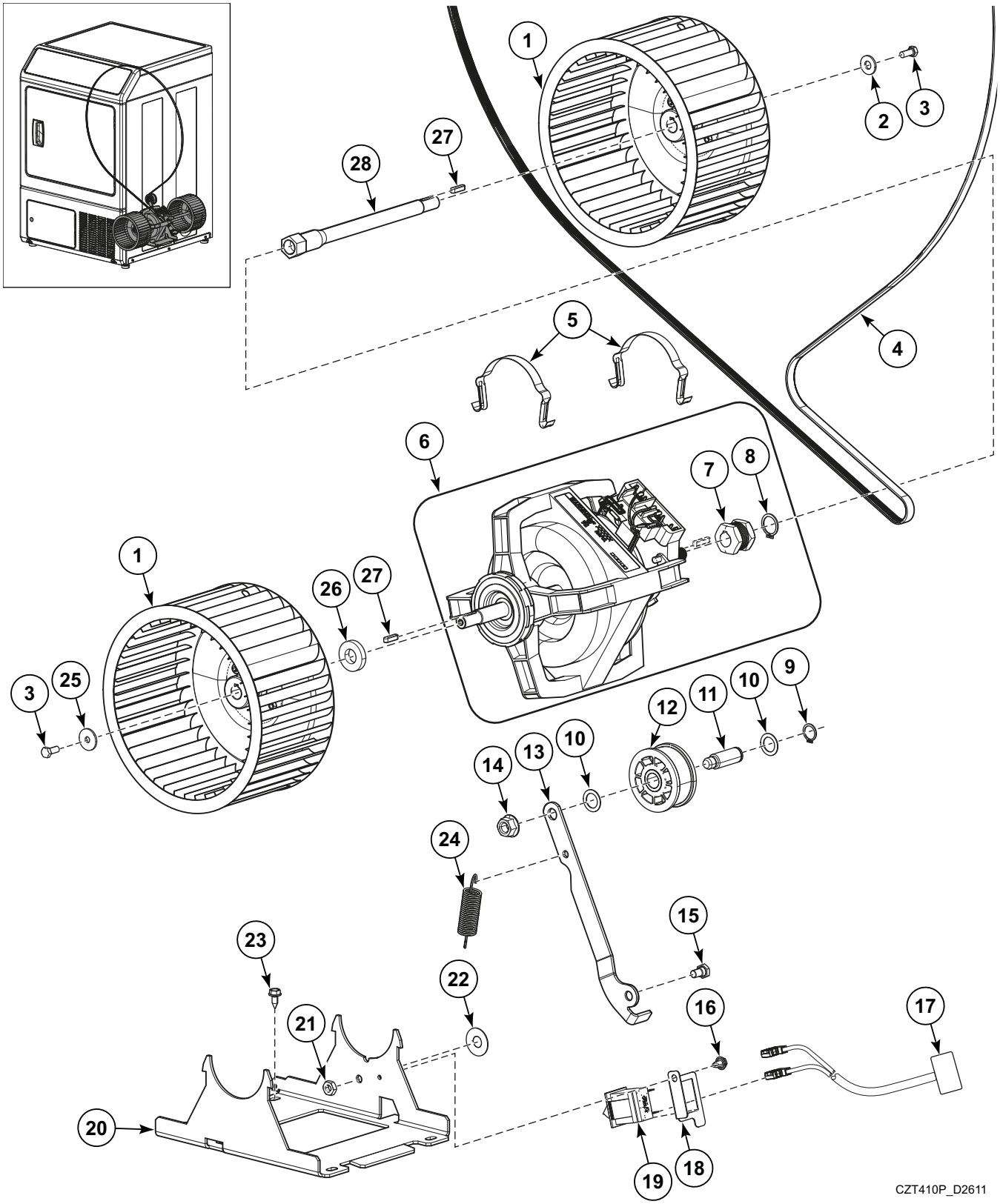

© Copyright, Alliance Laundry Systems LLC – DO NOT COPY or TRANSMIT

Motor, Belt, Exhaust Fans and Idler

REF	PART NO.	DESCRIPTION	COMMENTS
1	D518394	Fan	
2	F431147	Washer	
3	SPPRI202001001	Screw	
4	D511255	Cylinder Belt	
5	D510180	Motor Mount Clamp	
6	D518418	Motor and Pulley Assembly	
7	570755	Motor Pulley	
8	503574	Retaining Ring	
9	23748	Retaining Ring	
10	52549	Washer	
11	56461P	Shaft	
12	D510142P	Idler Wheel and Bearing Assembly	
13	D518251	Idler Lever	
14	44087301	Nut	
15	D500824	Screw	
16	SP100218	Screw	
17	D517236	Broken Belt Harness	
18	573543	Motor Switch Bracket	
19	D516391	Switch	
20	D518146	Motor Mount	
21	52566	Nut	
22	430782	Washer	
23	D503688	Screw	
24	D510185	Idler Spring	
25	70367201	Washer	
26	D518446	Gasket	
27	570779	Feather	
28	D518417	Motor Shaft Extension	

© Copyright, Alliance Laundry Systems LLC – DO NOT COPY or TRANSMIT

EPP Box and Base

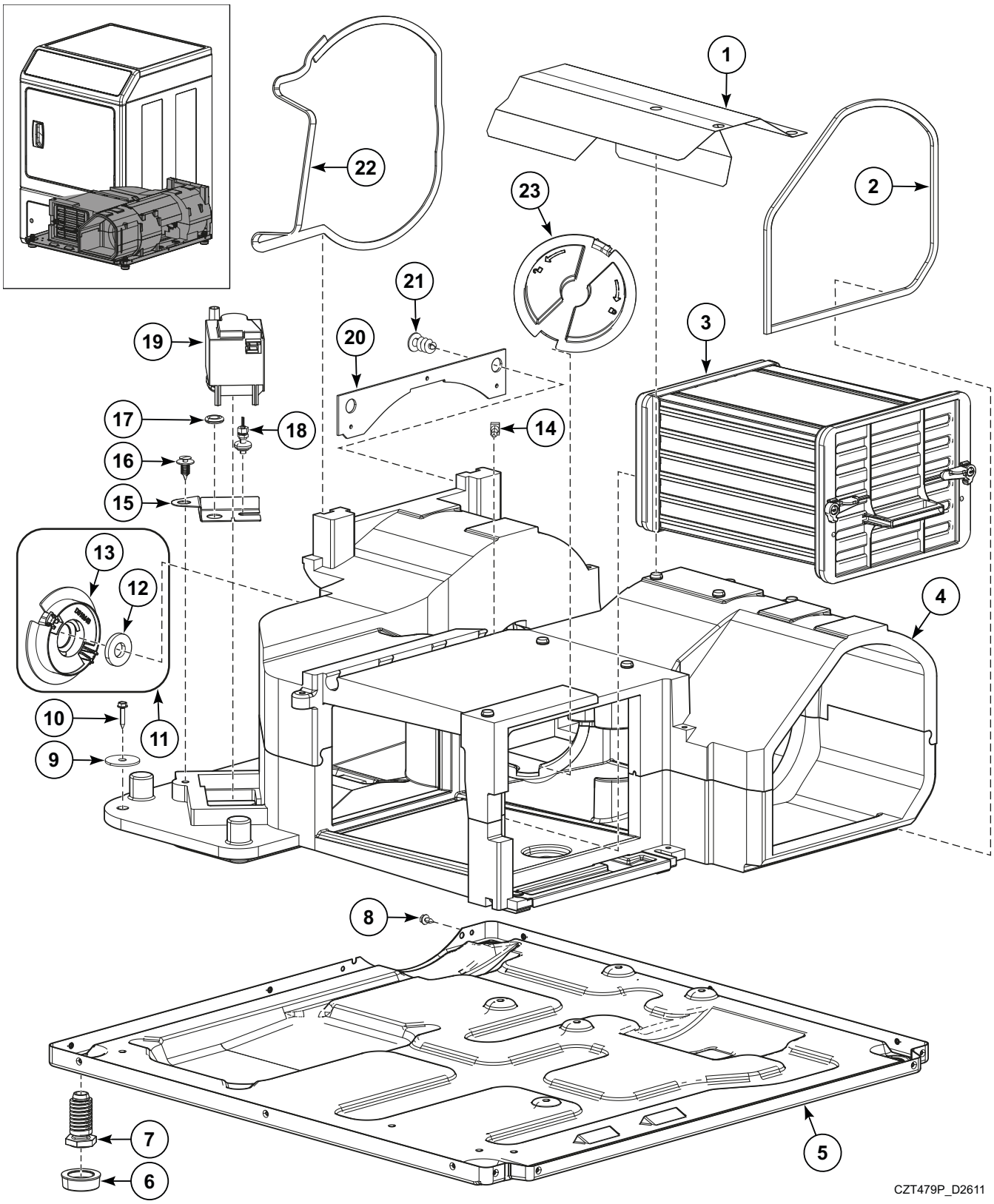

© Copyright, Alliance Laundry Systems LLC – DO NOT COPY or TRANSMIT

EPP Box and Base

REF	PART NO.	DESCRIPTION	COMMENTS
1	D518388	Shield	
2	D518396	Grid Seal	
3	D518422	Condenser	
4	580050	EPP box complete	Includes items 2, 3, 11, 15 - 23; For models through Serial No.10CD000668WZ is recommended to also order Air Duct Assembly 583014.
5	D518166	Dryer Base	
6	D501855	Rubber Foot	
7	D510135	Leveling Leg	
8	SP100218	Screw	
9	800625	Washer	
10	SP100306	Screw	
11	580051	Motor Access Cover Complete	
12	D518347	Gasket	
13	D518443	Motor Access Cover	
14	528492	Plug	
15	580011	Condensate Pump Base	
16	D518496	Retainer Clip	
17	SP273121011001	Cable Grommet	
18	D518306	Floating Switch	
19	D518479	Pump	
20	580010	Backplate EPP Top	
21	D518563	Screw	
22	D518428	Rear Panel Seal	
23	D518442	Idler Access Cover	

© Copyright, Alliance Laundry Systems LLC – DO NOT COPY or TRANSMIT

Front Bulkhead and Air Duct

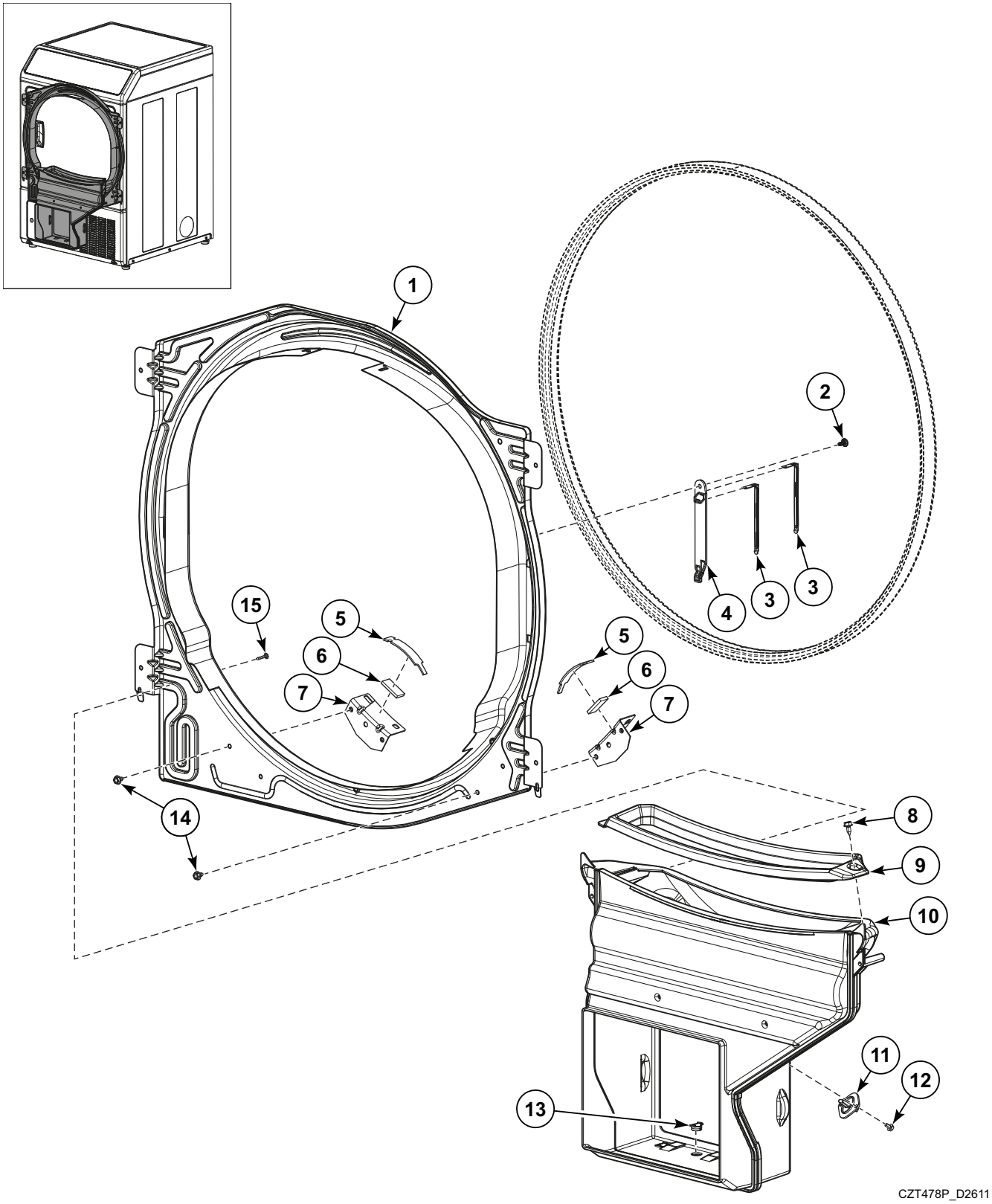

© Copyright, Alliance Laundry Systems LLC – DO NOT COPY or TRANSMIT

Front Bulkhead and Air Duct

REF	PART NO.	DESCRIPTION	COMMENTS
1	D515532	Front Bulkhead Assembly	Galvanized; Includes Cylinder Seal and items 2-7 and 13
2	SP529206	Screw	
3	D513737	Bar Sensor	
4	D513738	Moisture Sensor Base	
5	D513710	Cylinder Glide	
6	D510189	Felt Pad	
7	D510145	Cylinder Glide Bracket	
8	SP100218	Screw	
9	582135	Lint Filter	White
10	D518272	Air Duct Assembly	Models through Serial No.10CD000668WZ; White
	583014	Air Duct Assembly	Models starting Serial No.10CD000671YB; White
11	D510523	Thermistor Assembly	
12	23222	Screw	
13	583010	Drain Pin	Models starting Serial No.10CD000671YB
14	D503688	Screw	
15	D505295	Screw	

© Copyright, Alliance Laundry Systems LLC – DO NOT COPY or TRANSMIT

Cylinder Assembly

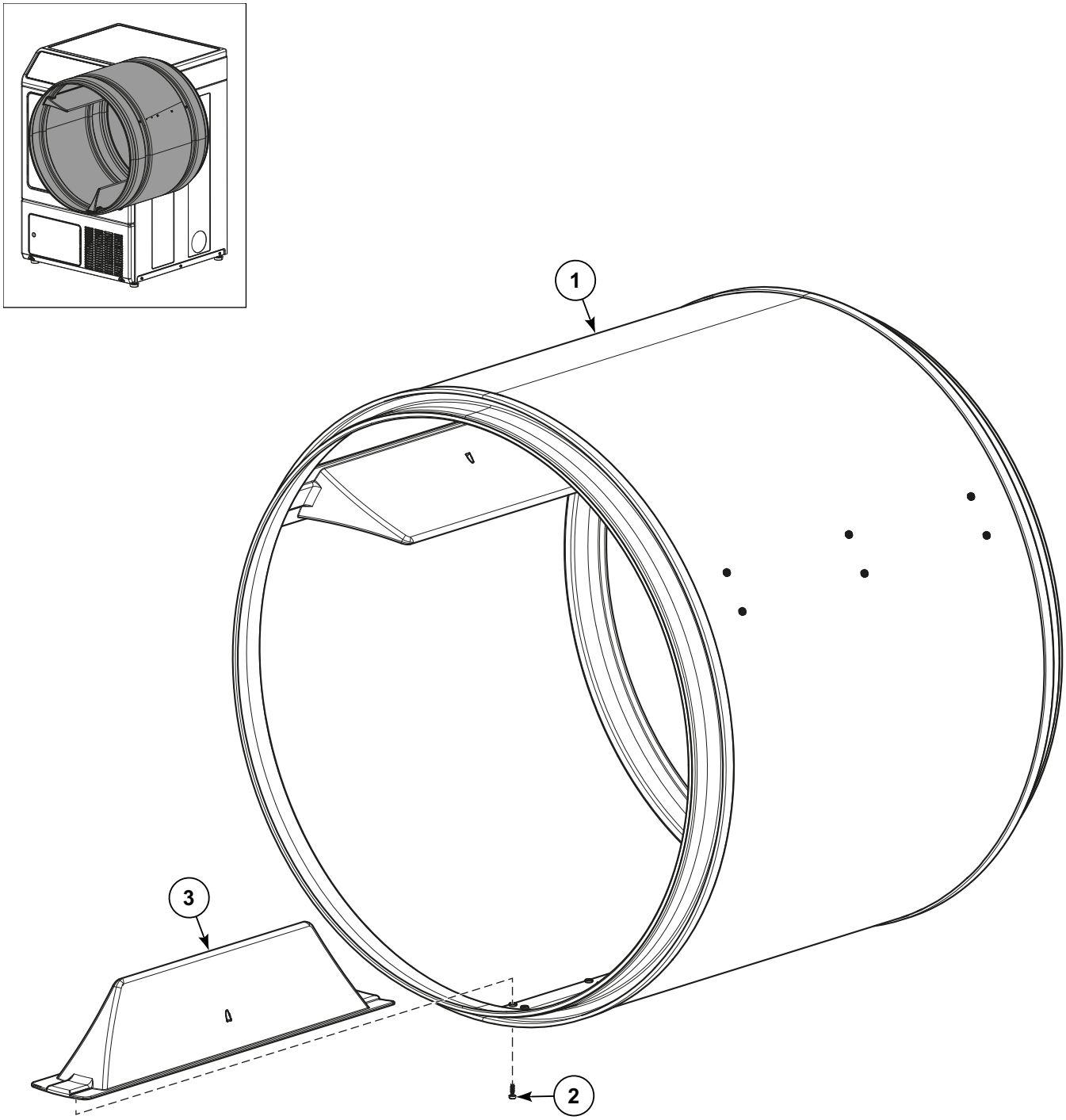

CZT480P_D2611

© Copyright, Alliance Laundry Systems LLC – DO NOT COPY or TRANSMIT

Cylinder Assembly

REF	PART NO.	DESCRIPTION	COMMENTS
1	573550	Cylinder Assembly	Galvanized; Includes item 2 and 3; Models starting Serial No.10CD000671YB
2	573557	Screw	Models starting Serial No.10CD000671YB
	D518562	Screw	Models through Serial No.10CD000668WZ
3	573547	Cylinder Baffle	Models starting Serial No.10CD000671YB; White
	D510102W	Cylinder Baffle	Models through Serial No.10CD000668WZ; White

© Copyright, Alliance Laundry Systems LLC – DO NOT COPY or TRANSMIT

Rear Bulkhead and Cylinder Roller

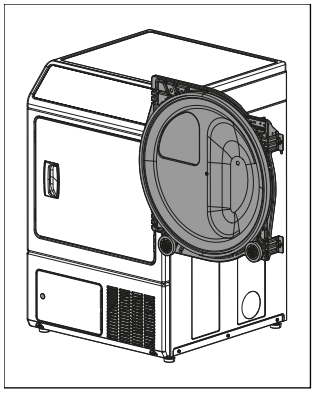

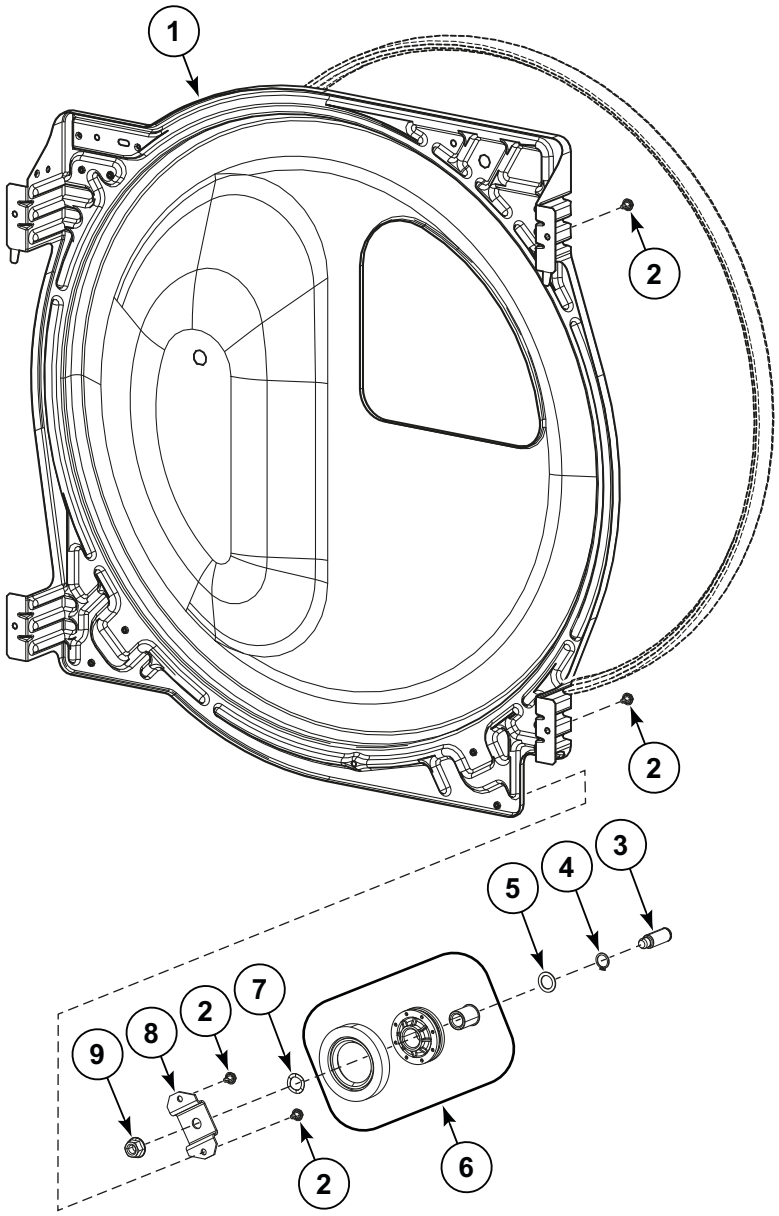

CZT411P_D2611

© Copyright, Alliance Laundry Systems LLC – DO NOT COPY or TRANSMIT

Rear Bulkhead and Cylinder Roller

REF	PART NO.	DESCRIPTION	COMMENTS
1	D511082P	Rear Bulkhead Assembly	Galvanized; Includes Cylinder Seal
2	D503688	Screw	
3	56461P	Shaft	
4	23748	Retaining Ring	
5	52549	Washer	
6	D510708P	Cylinder Roller	
7	D504082	Washer	
8	D510100	Cylinder Roller Bracket	
9	44087301	Nut	

© Copyright, Alliance Laundry Systems LLC – DO NOT COPY or TRANSMIT

Terminal Block - 1 Phase Models

Model SDCNGBGS456UG01, SDCNLBGS456UG01, SDCNXAGS456UG01, NDCNGBGS456UG01, NDCNLBGS456UG01 and NDCNXAGS456UG01

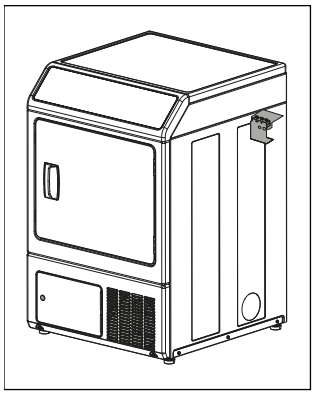

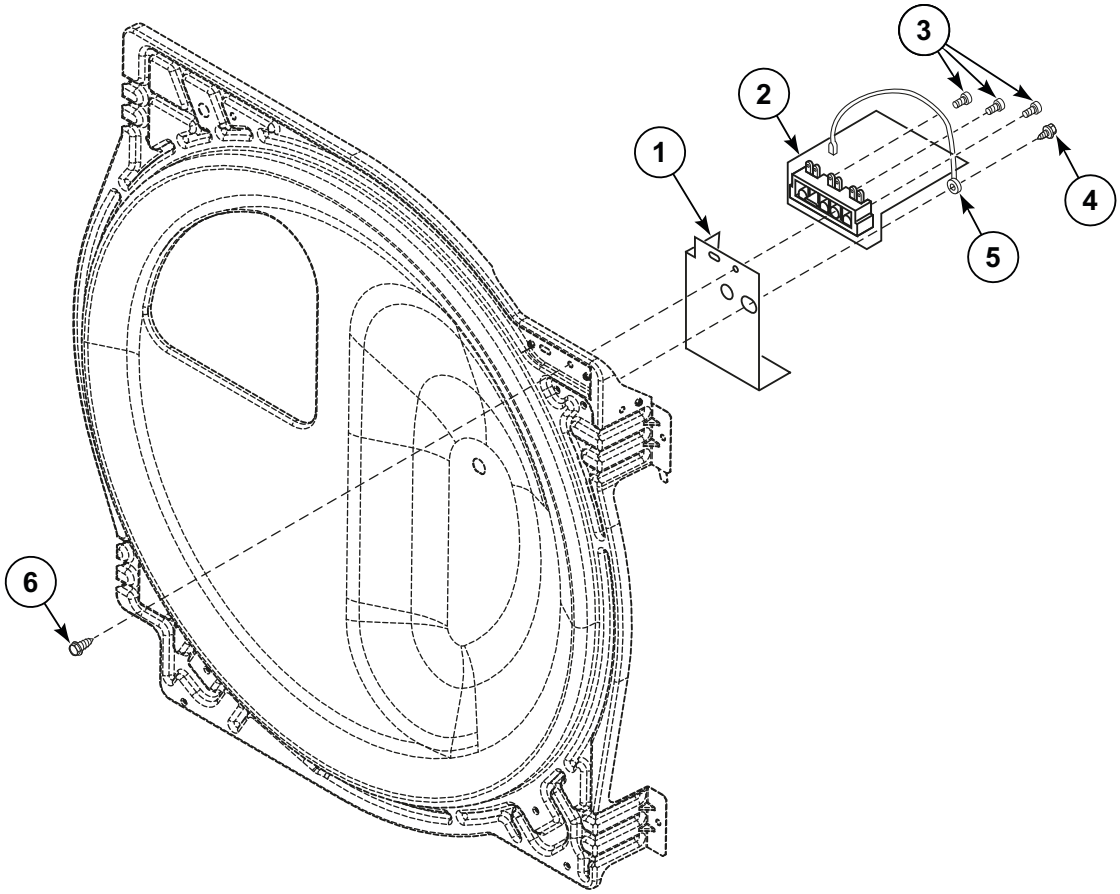

CZT418P_D2611

© Copyright, Alliance Laundry Systems LLC – DO NOT COPY or TRANSMIT

Terminal Block - 1 Phase Models

REF	PART NO.	DESCRIPTION	COMMENTS
1	D517715	Terminal Block Shield	
2	D510190P	Terminal Block Assembly	
3	61199	Screw	
4	D503688	Screw	
5	D518257	Ground Wire Assembly	
6	SP100218	Screw	

© Copyright, Alliance Laundry Systems LLC – DO NOT COPY or TRANSMIT

Terminal Block - 3 Phase Models

Model SDCNGBGS406UG01, SDCNLBGS406UG01, SDCNXAGS406UG01, NDCNGBGS406UG01, NDCNLBGS406UG01 and NDCNXAGS406UG01

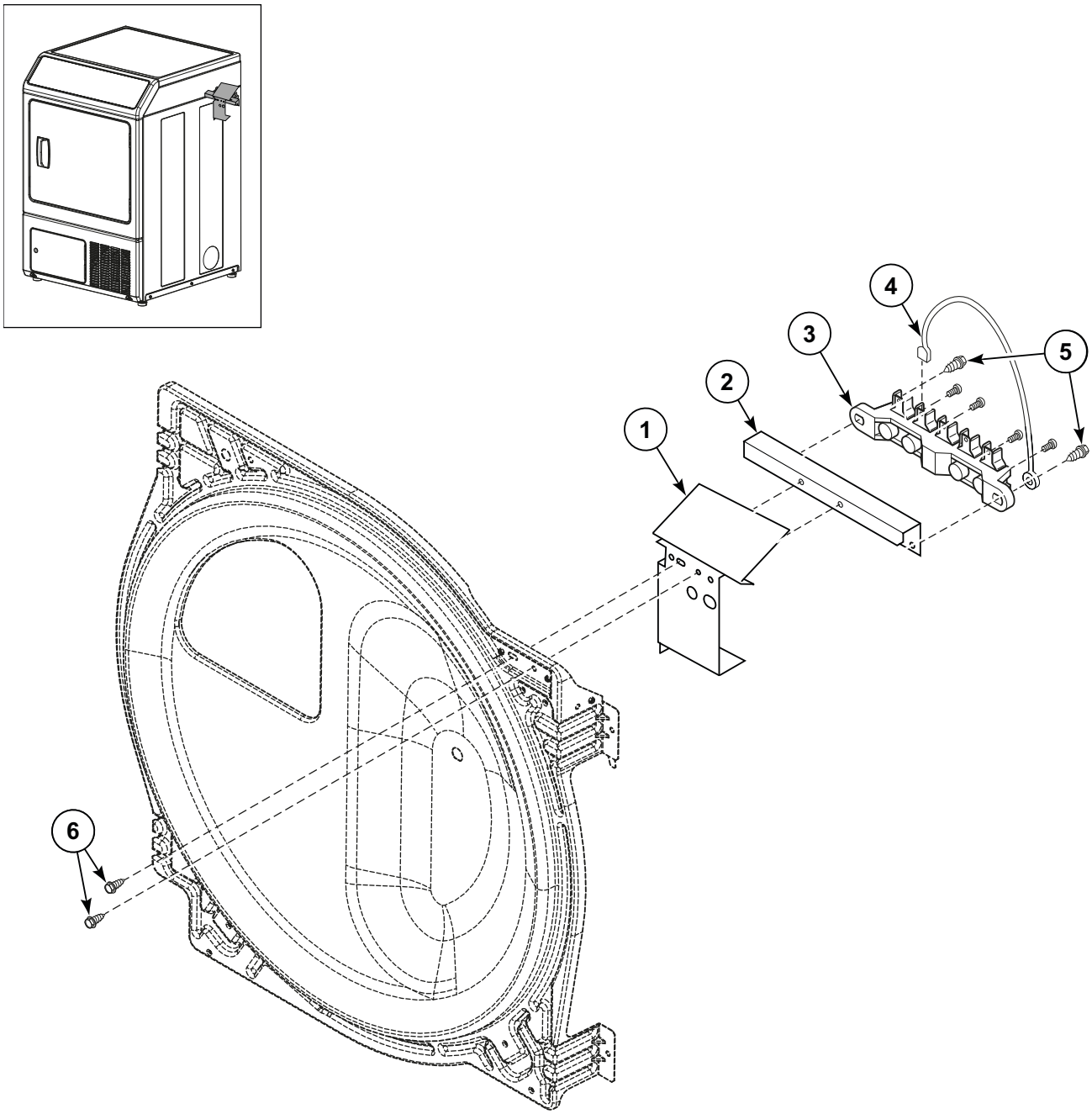

CZT419P_D2611

© Copyright, Alliance Laundry Systems LLC – DO NOT COPY or TRANSMIT

Terminal Block - 3 Phase Models

REF	PART NO.	DESCRIPTION	COMMENTS
1	D517715	Terminal Block Shield	
2	D505875	Terminal Block Support Bracket	
3	D505876	Terminal Block Assembly	
4	D518257	Ground Wire Assembly	
5	SP100218	Screw	
6	D503688	Screw	

© Copyright, Alliance Laundry Systems LLC – DO NOT COPY or TRANSMIT

Rear Panel

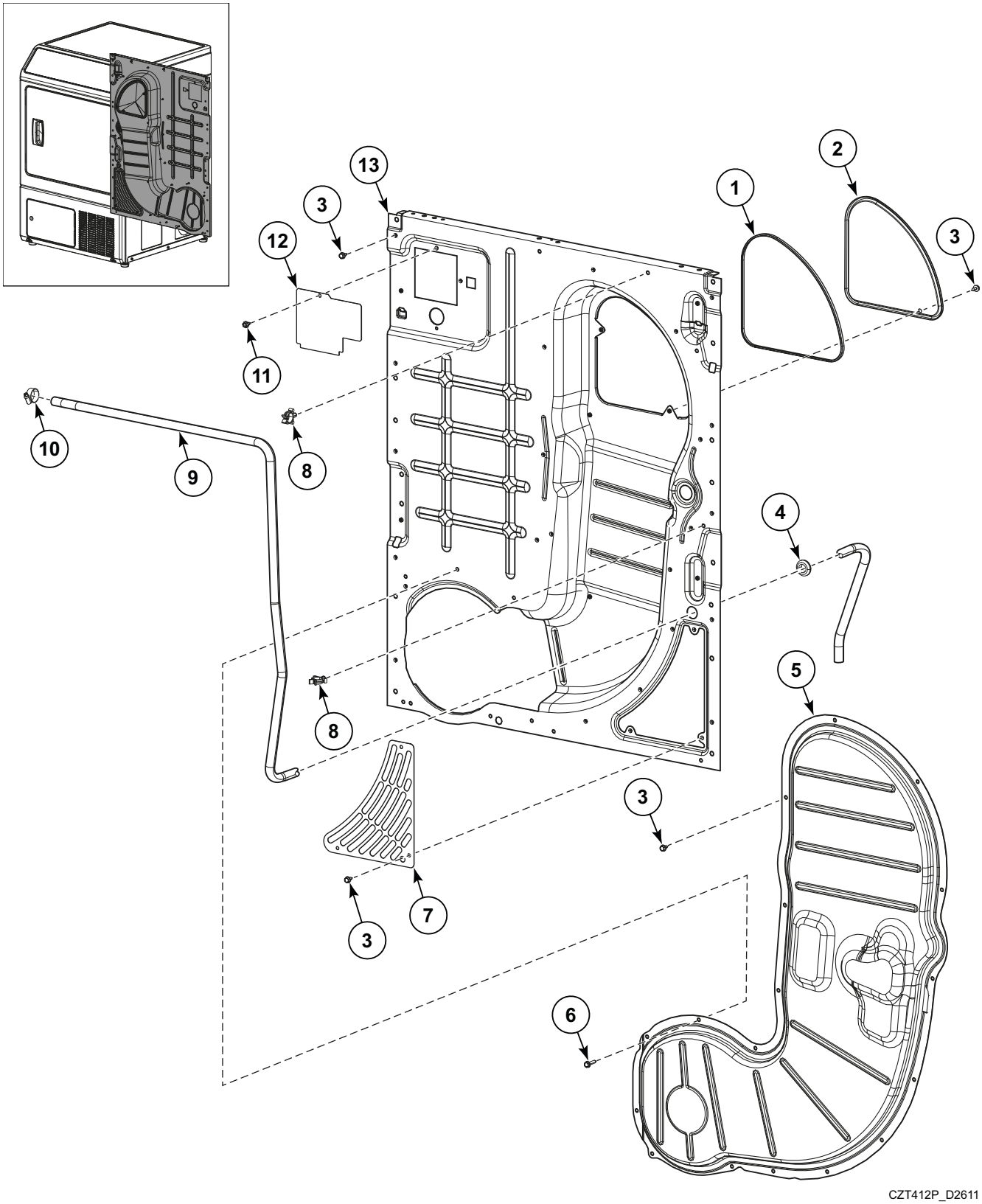

© Copyright, Alliance Laundry Systems LLC – DO NOT COPY or TRANSMIT

Rear Panel

REF	PART NO.	DESCRIPTION	COMMENTS
1	D518342	Outlet Cover Seal	
2	D518524	Outlet Cover	
3	SP100218	Screw	
4	D518484	Rubber Grommet	
5	580045	Duct Cover	Includes Seal
6	SP100306	Screw	
7	580012	Rear Panel Outlet Cover	
8	D518448	Hose Clamp	
9	SPPRI540020005	Hose	
10	807386	Hose Clamp	
11	D503688	Screw	
12	573560	Access Cover Plate	
13	D518246	Cabinet Rear Panel	

© Copyright, Alliance Laundry Systems LLC – DO NOT COPY or TRANSMIT

Heating and Element Assembly - 1 Phase Models

Model SDCNGBGS456UG01, SDCNLBGS456UG01, SDCNXAGS456UG01, NDCNGBGS456UG01, NDCNLBGS456UG01 and NDCNXAGS456UG01

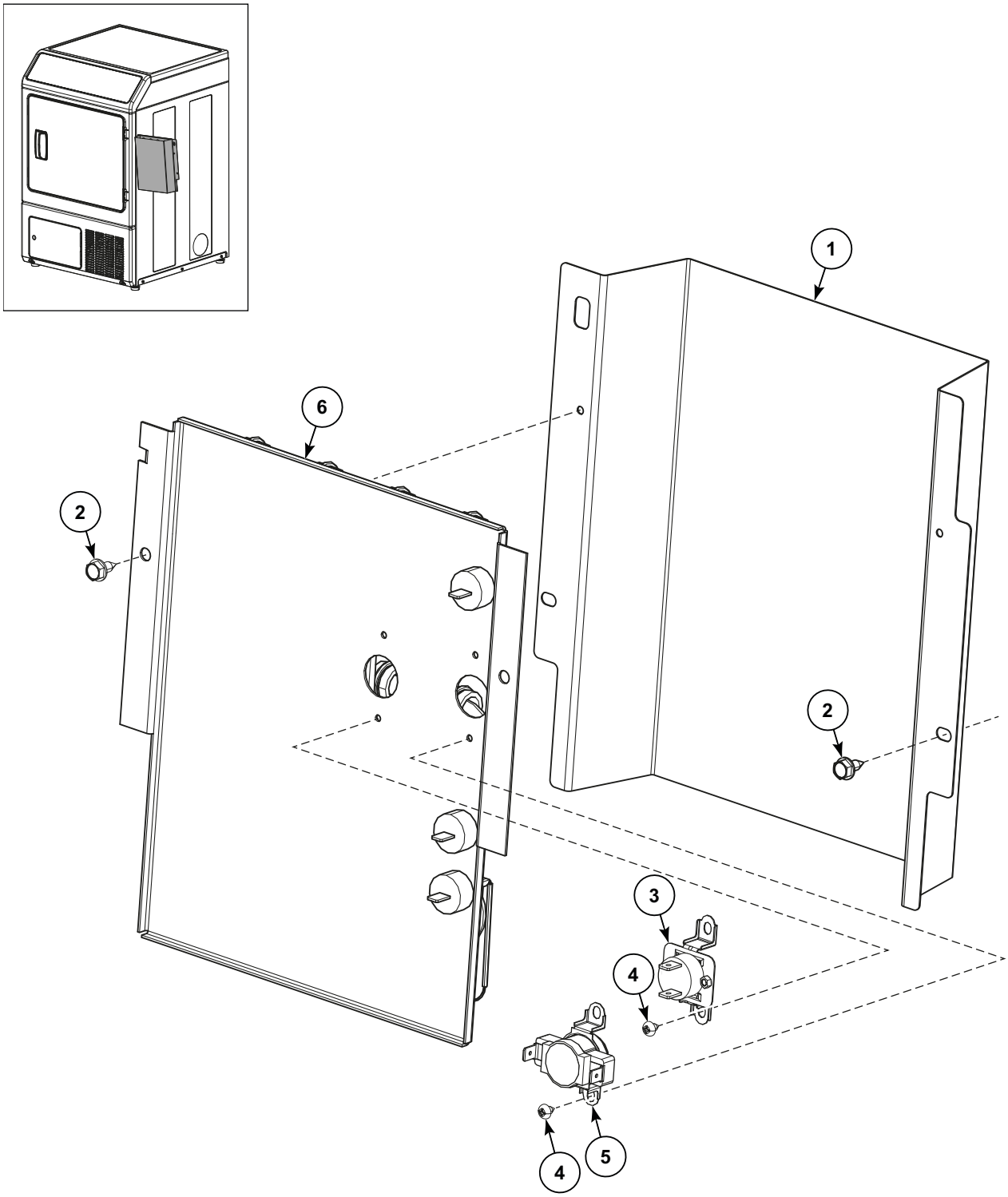

CZT408P_D2611

© Copyright, Alliance Laundry Systems LLC – DO NOT COPY or TRANSMIT

Heating and Element Assembly - 1 Phase Models

REF	PART NO.	DESCRIPTION	COMMENTS
1	D518508	Heating Elements Shield	
2	SP100218	Screw	
3	D518649	Thermal Fuse Assembly	
4	SP517238	Screw	
5	D510700	Limit Thermostat	Blue
6	D510328P	Heater Assembly	Blue; 240 Volt/50-60 Hertz; 3.1kW

© Copyright, Alliance Laundry Systems LLC – DO NOT COPY or TRANSMIT

Heating and Element Assembly - 3 Phase Models

Model SDCNGBGS406UG01, SDCNLBGS406UG01, SDCNXAGS406UG01, NDCNGBGS406UG01, NDCNLBGS406UG01 and NDCNXAGS406UG01

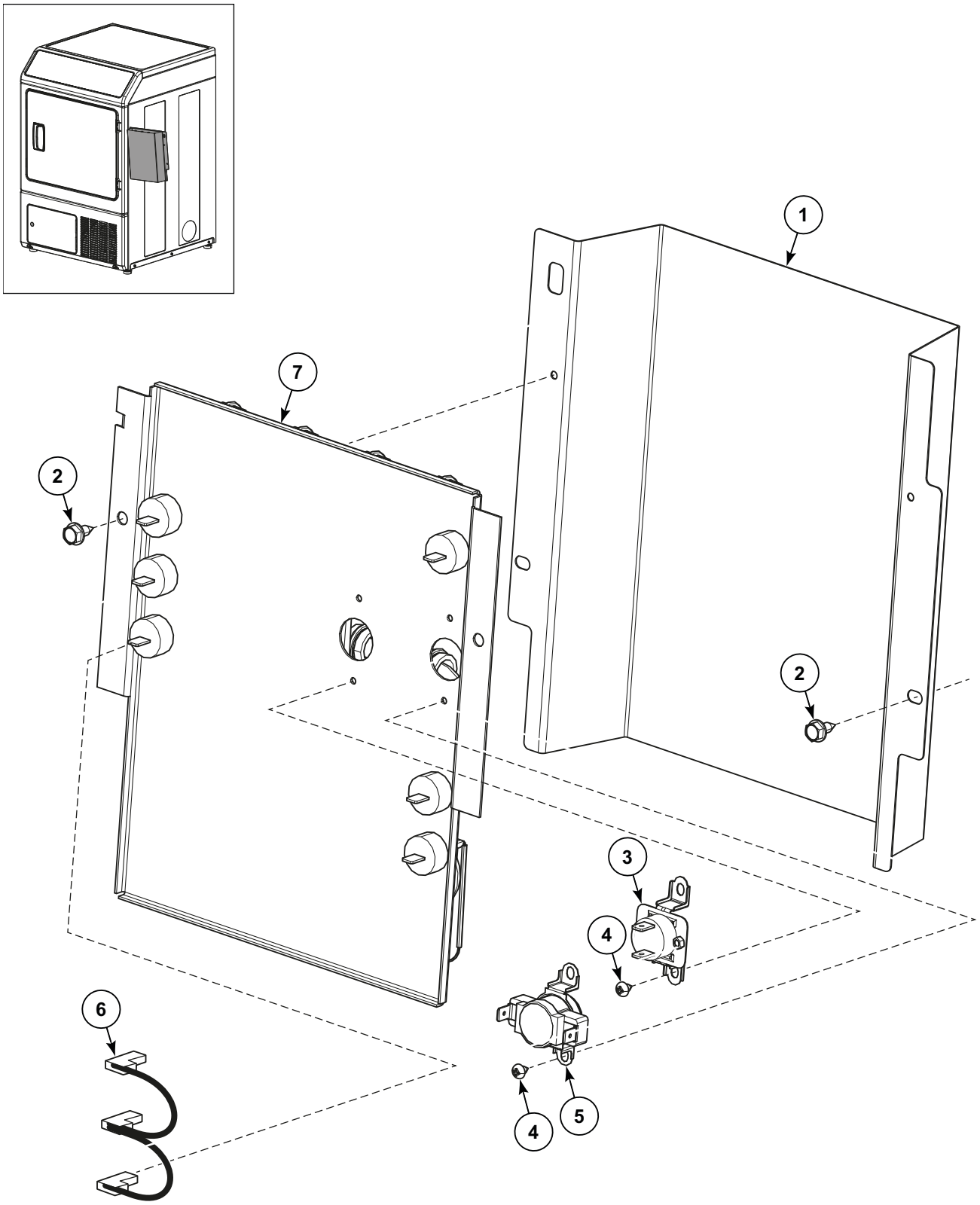

© Copyright, Alliance Laundry Systems LLC – DO NOT COPY or TRANSMIT

Heating and Element Assembly - 3 Phase Models

REF	PART NO.	DESCRIPTION	COMMENTS
1	D518508	Heating Elements Shield	
2	SP100218	Screw	
3	D518542	Thermal Fuse Assembly	
4	517238	Screw	
5	D510701	Limit Thermostat	Red
6	D518130	Jumper Wire Assembly	3 Phase
7	D511014P	Heater	Red; 400 Volt/3 Phase

© Copyright, Alliance Laundry Systems LLC – DO NOT COPY or TRANSMIT

I/O Control Board, Contactor and Harnesses

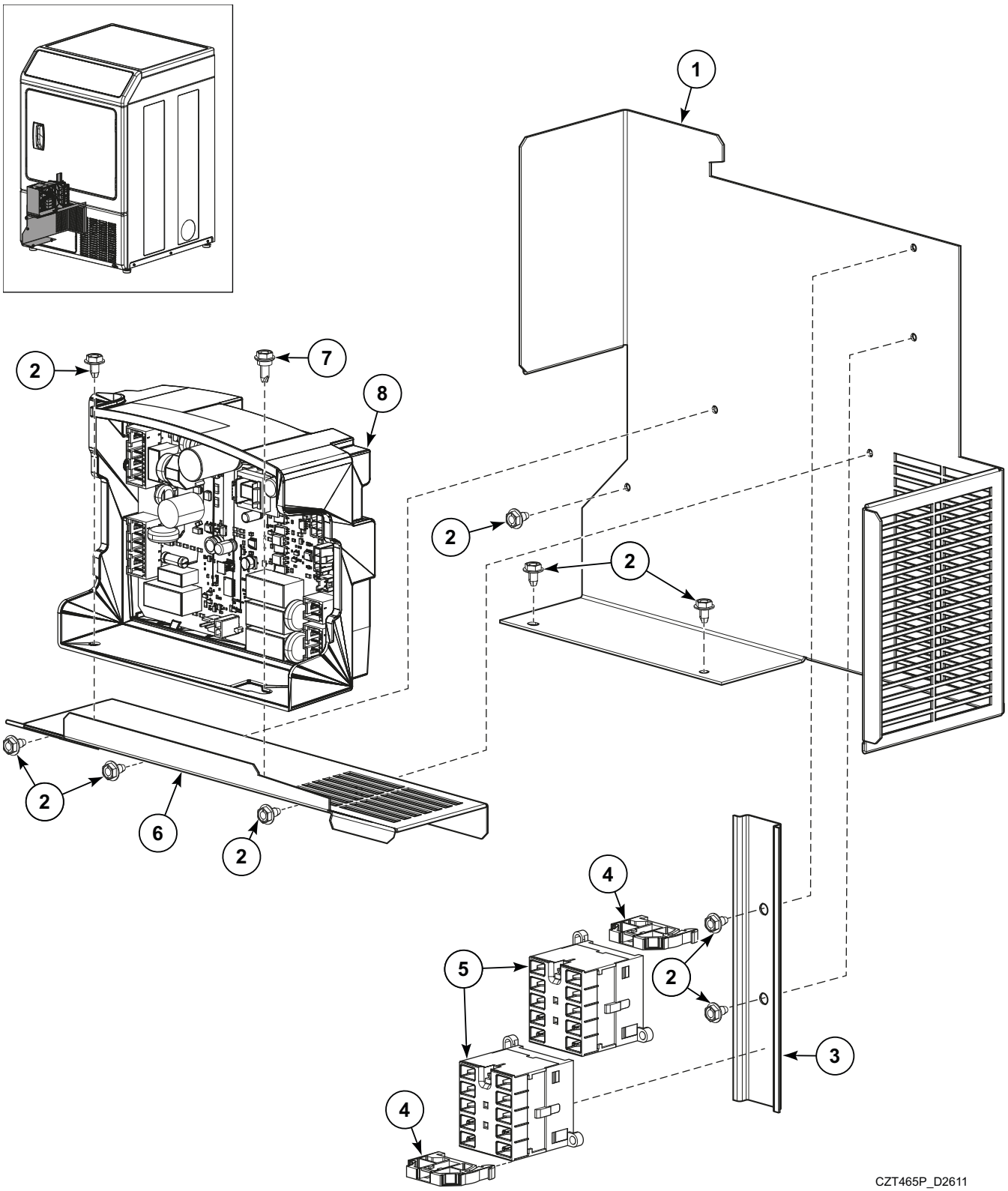

© Copyright, Alliance Laundry Systems LLC – DO NOT COPY or TRANSMIT

I/O Control Board, Contactor and Harnesses

REF	PART NO.	DESCRIPTION	COMMENTS
	582412	Service Kit	Electro cover (I/O Board)
	D518129	Power Harness	1 phase; used between item 5 and D510190
	D517689	Power Harness	3 phase; used between item 5 and D505876
	D518107	Heater Harness	1 phase; used between item 5 and heating element
	D518105	Heater Harness	3 phase; used between item 5 and heating element
	D518131	Dual Contactor Harness	1 phase; used between item 5
	D518535	Dual Contactor Harness	3 phase; used between item 5
1	573561	Contactor Bracket	
2	D503688	Screw	
3	573562	Wago Plate	
4	SP346000209101	End Stop	
5	70482603	Contactor	
6	573541	Cover	
7	D514428	Screw	
8	D517193	I/O Control Board	

© Copyright, Alliance Laundry Systems LLC – DO NOT COPY or TRANSMIT

Power Cord

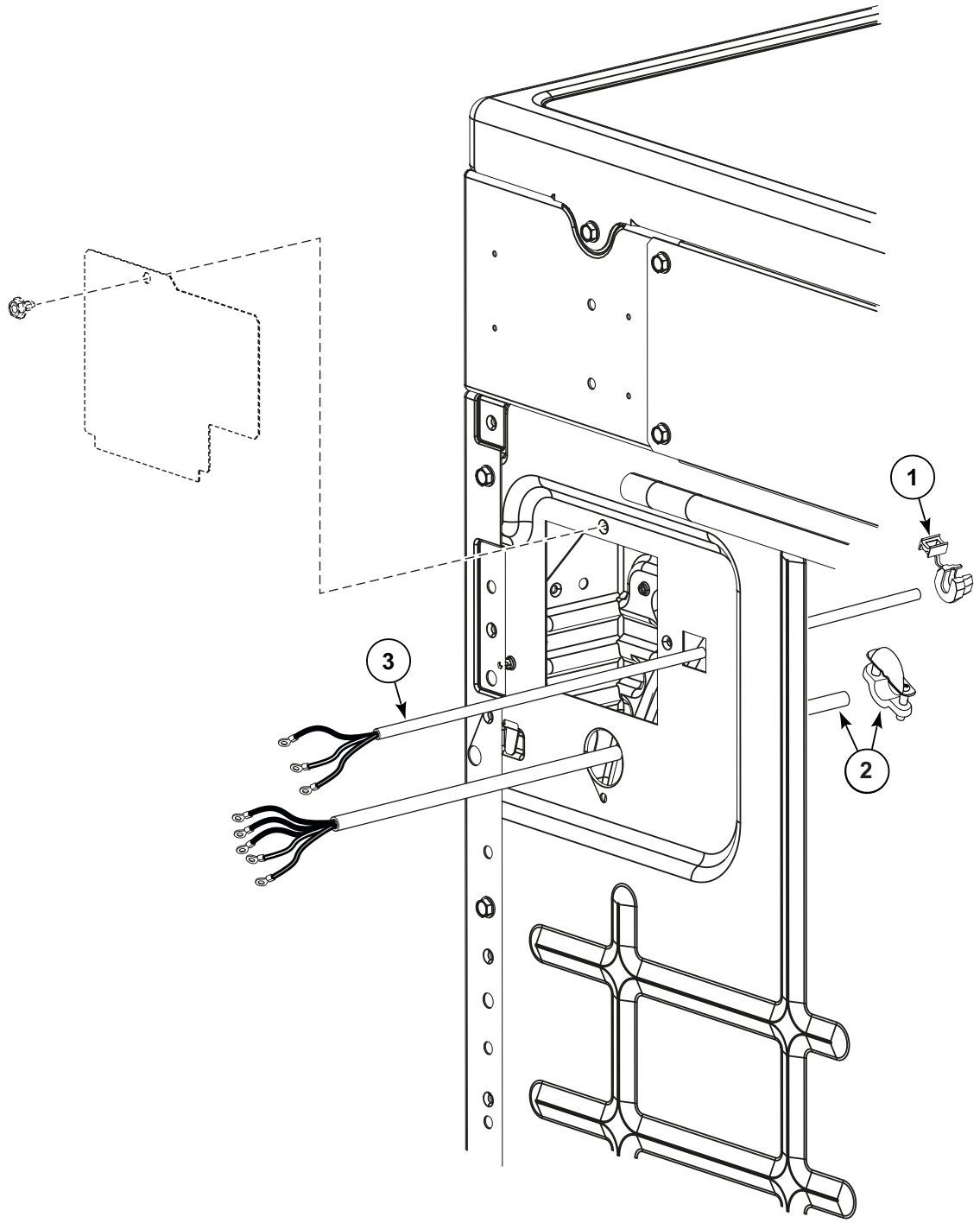

CZT405P_D2611

© Copyright, Alliance Laundry Systems LLC – DO NOT COPY or TRANSMIT

Power Cord

REF	PART NO.	DESCRIPTION	COMMENTS
1	D517492	Strain Relief	1 Phase Models
2	D517699	Lead-In Cord	3 Phase Models
3	D516747	Lead-In Cord Assembly	1 Phase Models

© Copyright, Alliance Laundry Systems LLC – DO NOT COPY or TRANSMIT

Wire Harness

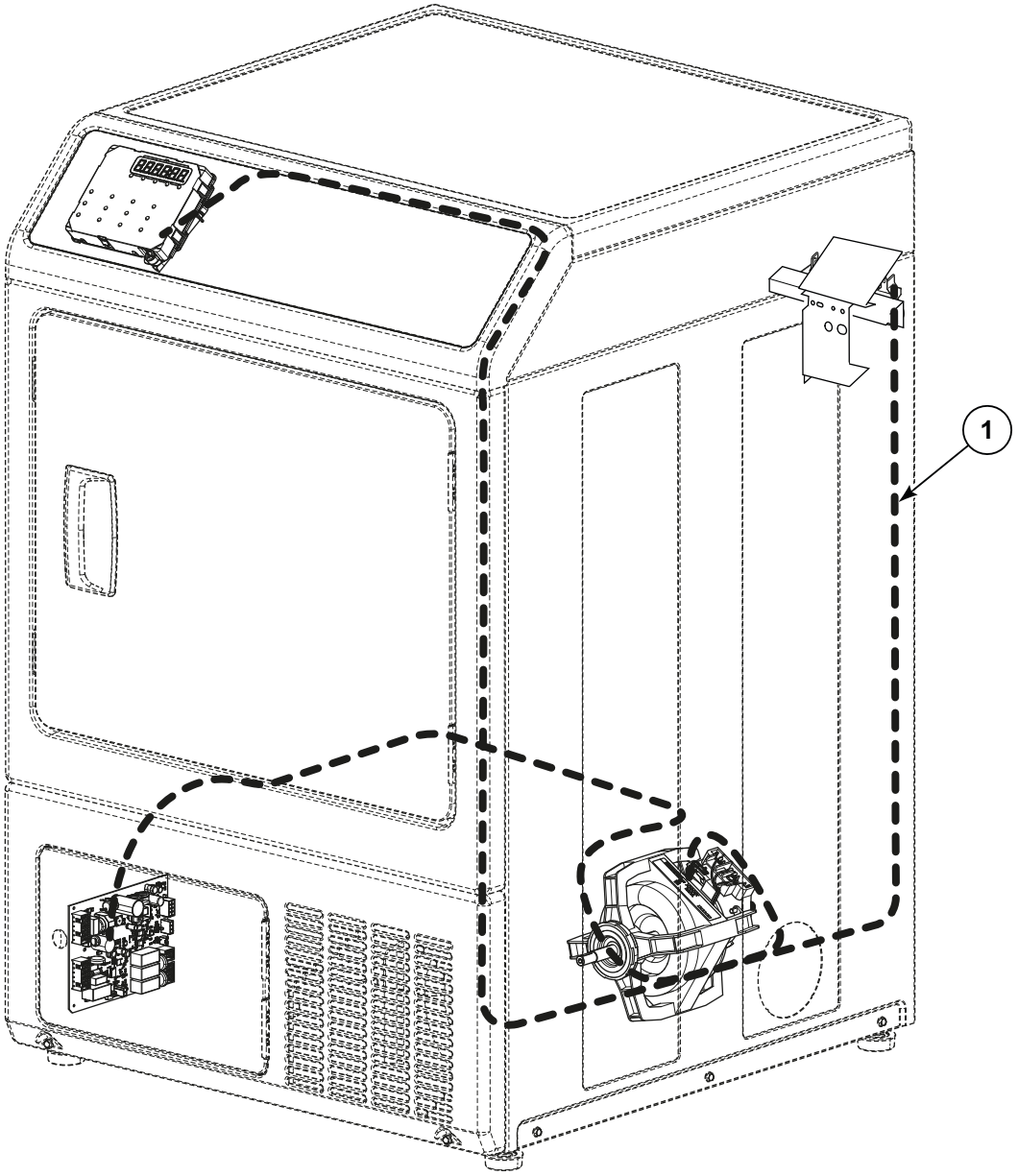

CZT406P_D2611

© Copyright, Alliance Laundry Systems LLC – DO NOT COPY or TRANSMIT

Wire Harness

REF	PART NO.	DESCRIPTION	COMMENTS
	582903	Coinmeter Harness	Coin version models
	582904	Electronic Coinmeter Harness	Coin version models; Need to be ordered with 582903
	582917	Transformer Harness	CPS models; Need to be ordered with F8714001
	F8714001	Power Harness	CPS models; Need to be ordered with 582917
	582916	Transformer	CPS models
	SP545221	Relay	CPS models; RT424012-12V DC
	807719	Interface Board	CPS models
1	D518101	Main Condensing Harness	All models

© Copyright, Alliance Laundry Systems LLC – DO NOT COPY or TRANSMIT

Label Location

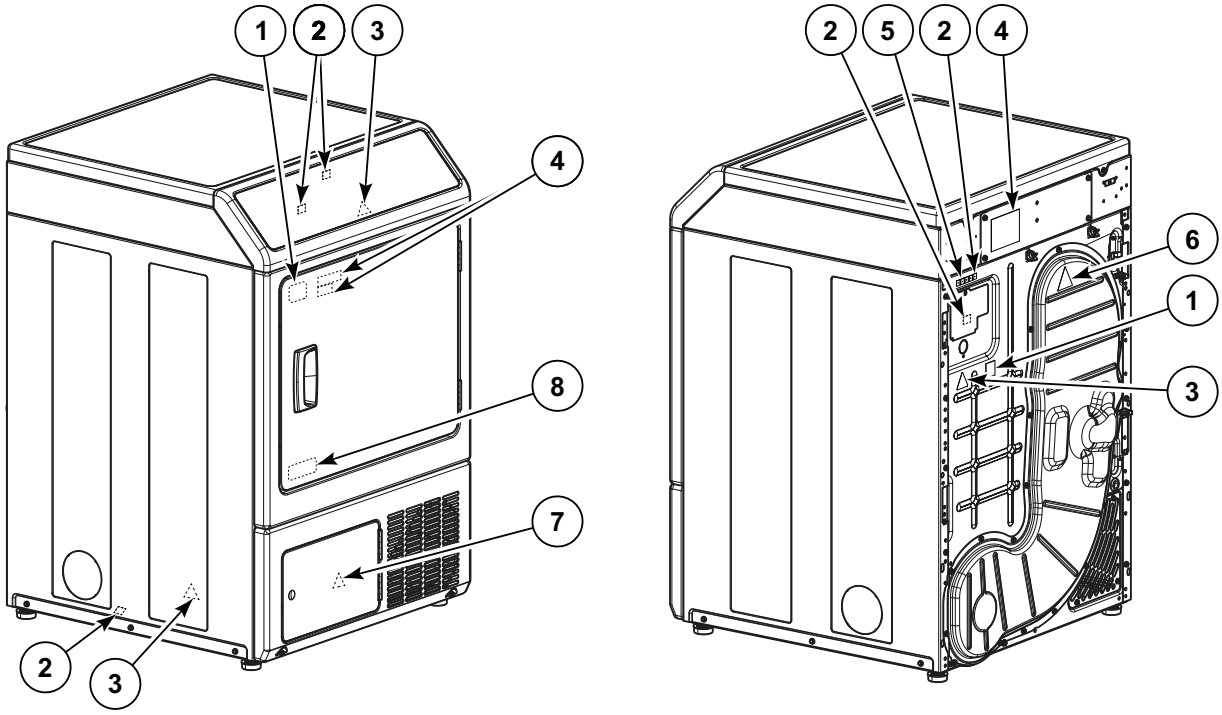

REF 1

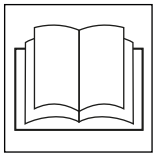

REF 2

REF 3

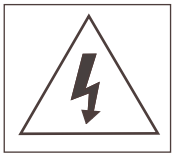

REF 4

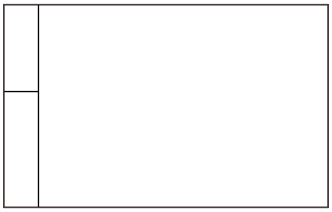

REF 5

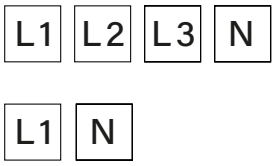

REF 6

REF 7

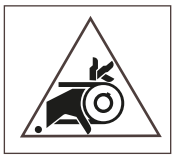

REF 8

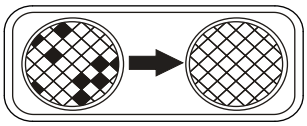

CZT404P_D2611

© Copyright, Alliance Laundry Systems LLC – DO NOT COPY or TRANSMIT

Label Location

REF	PART NO.	DESCRIPTION	COMMENTS
1	573597	Label	Read instructions before using
2	SPPRI551000001	Earthing Index Plate	
3	573598	Label	Shock; Inside machine and outside on rear side
4	573592	Serial Plate	Without foil from the front, with foil from the back
	SP516715	Transparent Foil	
5	PRI551001001	Phase Index Plate	L1, L2, L3, N (3Ph)
	PRI551001001	Phase Index Plate	L1, N (1Ph)
6	573596	Label	Hot surface
7	573595	Label	Pinch
8	573594	Label	Clean filter

© Copyright, Alliance Laundry Systems LLC – DO NOT COPY or TRANSMIT

© Copyright, Alliance Laundry Systems LLC – DO NOT COPY or TRANSMIT

Parts Index

A

Access Cover Plate
573560 39

Access Panel Assembly
D518483DG 19
582112 21

Access Panel Door Assembly
579245 19
582117 21

Air Duct Assembly
D518272 29
583014 29

B

Backplate EPP Top
580010 27

Bar Sensor
D513737 29

Bolt
29651 7

Broken Belt Harness
D517236 25

C

Cabinet Rear Panel
D518246 39

Cabinet Side Panel
573566 ..... 13, 15
573567 ..... 13, 15

Cable Grommet
SP273121011001 27

Coin Meter
101531 9
101532 9
101633 9
101982 9
102057 9
102082 9
102451 9
102593 9
102605 9
548531 9
552580 9
552581 9
552582 9
553142 9
553143 9
553146 9
553147 9
553148 9
553149 9
553153 9
553157 9
553166 9
553192 9
553193 9
553194 9
555929 9
556035 9
560701 9
560709 9
560710 9
560711 9
560712 9
560713 9
560732 9
560738 9
560740 9
560741 9
560782 9
560783 9
560784 9
560794 9
560796 9
564820 11
568018 11
569908 11
569910 11
569913 11
569917 11
569989 11
569994 11
572330 11
572331 11
572332 11
572333 11
572356 11
572357 11
572382 11
572387 11
579807 11
579817 11
579858 11
579861 11
579866 11
579869 11
579870 11
70513302 11

Coin Meter Box
570562 ..... 9, 11

Coinmeter Harness
582903 49

Condensate Pump Base
580011 27

Condenser
D518422 27

Contactor
70482603 45

Contactor Bracket
573561 45

Control Assembly
D518647 ..... 5, 7

Control Bracket
573544 5

Control Overlay
D518059 7
D518614 5
D518624 5
574598 5
574600 5

N/A items do not appear in index.

© Copyright, Alliance Laundry Systems LLC – DO NOT COPY or TRANSMIT

583601 7
Control Panel Assembly
582124 7
807764 5
Control Wrapper
573563 13
573564 13
Cover
573541 45
Cylinder Assembly
573550 31
Cylinder Baffle
D510102W 31
573547 31
Cylinder Belt
D511255 25
Cylinder Glide
D513710 29
Cylinder Glide Bracket
D510145 29
Cylinder Roller
D510708P 33
Cylinder Roller Bracket
D510100 33

D

Door Catch Assembly
D510177 23
Door Handle Wedge
D510129W 17
Door Liner Assembly
D516508 17
Door Liner Grill
D503870W 17
Door Pull
D512947 17
Door Strike
D510181 17
Drain Pin
583010 29
Drip Shield
D514327 23
Dryer Base
D518166 27
Dryer Door
573565 17
Dual Contactor Harness
D518131 45
D518535 45
Duct Cover
580045 39

E

Earthing Index Plate
SPPRI551000001 51
Electronic Coinmeter Harness
582904 49
End Stop
SP346000209101 45
EPP box complete
580050 27
Expansion Clip
70030501 13

F

Fan
D518394 25
Feather
570779 25
Felt Pad
D510189 29
Floating Switch
D518306 27
Front Bulkhead Assembly
D515532 29
Front Panel
573569 23
582122 7
Front Panel Seal
582413 23

G

Gasket
D518347 27
D518446 25
Grid Seal
D518396 27
Ground Wire Assembly
D518257 ..... 35, 37

H

Heater
D511014P 43
Heater Assembly
D510328P 41
Heater Harness
D518105 45
D518107 45
Heating Elements Shield
D518508 ..... 41, 43
Hinge
D511036 ..... 17, 19, 21
Hinge Hole Plug
D510186 23
Hose
SPPRI540020005 39
Hose Clamp
D518448 39
807386 39

I

Idler Access Cover
D518442 27

N/A items do not appear in index.

© Copyright, Alliance Laundry Systems LLC – DO NOT COPY or TRANSMIT

Idler Lever
D518251 25
Idler Spring
D510185 25
Idler Wheel and Bearing Assembly
D510142P 25
Interface Board
807719 49
I/O Control Board
D517193 45

J

Jumper Wire Assembly
D518130 43

L

Label
573594 51
573595 51
573596 51
573597 51
573598 51
Lead-In Cord
D517699 47
Lead-In Cord Assembly
D516747 47
Leveling Leg
D510135 27
Limit Thermostat
D510700 41
D510701 43
Liner Door Seal
573540 17
Lint Filter
582135 29
Lock Assembly
582125 7
582126 21
Lock Latch
D518363 19

M

Main Condensing Harness
D518101 49
Meter Case Assembly
807254DG 7
Moisture Sensor Base
D513738 29
Motor Access Cover
D518443 27
Motor Access Cover Complete
580051 27
Motor and Pulley Assembly
D518418 25
Motor Mount
D518146 25
Motor Mount Clamp
D510180 25
Motor Pulley
570755 25
Motor Shaft Extension
D518417 25
Motor Switch Bracket
573543 25

N

Nut
RSP29786 ..... 9, 11
SP310934000003 19
44087201 7
44087301 ..... 25, 33
52566 25

O

Outlet Cover
D518524 39
Outlet Cover Seal
D518342 39

P

Panel Locator
56079 ..... 13, 15, 19, 21, 23
Phase Index Plate
PRI55100100 51
PRI551001001 51
Plug
528492 27
Power Harness
D517689 45
D518129 45
F8714001 49
Pump
D518479 27

R

Rear Access Panel
573558 13
Rear Bulkhead Assembly
D511082P 33
Rear Panel Outlet Cover
580012 39
Rear Panel Seal
D518428 27
Rear Wrapper Brace
573559 13
Relay
SP545221 49
Retainer Clip
D518496 27
Retaining Ring
23748 ..... 25, 33

N/A items do not appear in index.

© Copyright, Alliance Laundry Systems LLC – DO NOT COPY or TRANSMIT

503574 25
Rubber Foot
D501855 27
Rubber Grommet
D518484 39

S

Screw
D500226 ..... 17, 19, 21
D500824 25
D503688 ..... 23, 25, 29, 33, 35, 37, 39, 45
D505295 29
D514428 45
D518562 31
D518563 27
SPPRI202001001 25
SP100218 5, 7, 13, 15, 19, 21, 25, 27, 29, 35, 37, 39, 41, ... 43
SP100306 ..... 27, 39
SP309084000320 19
SP517238 41
SP520871 ..... 13, 15, 19, 21, 23
SP529206 29
23222 29
517238 43
573557 31
61199 35
804608 5
Serial Plate
573592 51
Service Kit
582412 45
Shaft
D56461P 33
56461P 25
Shield
D518388 27
Spring Latch
D518447 19
Strain Relief
D517492 47
Switch
D512973 23
D516391 25
70529301 7

T

Terminal Block Assembly
D505876 37
D510190P 35
Terminal Block Shield
D517715 ..... 35, 37
Terminal Block Support Bracket
D505875 37
Thermal Fuse Assembly
D518542 43
D518649 41
Thermistor Assembly
D510523 29
Top Panel
573568 13
582121 15
Top Panel Brace Assembly
804613 13
Top Panel Guide
803761 13
Transformer
582916 49
Transformer Harness
582917 49
Transparent Foil
SP516715 51

W

Wago Plate
573562 45
Washer
D504082 33
F431147 25
SP311125000003 19
SP311127000003 19
SP505430 5
311679824005 5
430782 25
52549 ..... 25, 33
70367201 25
800625 27
Wiring Harness Assembly
204916 ..... 5, 7
Wrapper Assembly
582114 15

N/A items do not appear in index.

© Copyright, Alliance Laundry Systems LLC – DO NOT COPY or TRANSMIT